PENTAIR

INSTALLER MANUAL

FLECK 5800 XTR

RESIDENTIAL

www.pentairaquaeurope.com

Table of Contents

1 Generalities 6
1.1 Scope of the documentation 6
1.2 Release management 6
1.3 Manufacturer identifier, product 6
1.4 Intended use 7
1.5 Abbreviations used 7
1.6 Norms 7
1.6.1 Applicable norms 7
1.6.2 Available certificates 8
1.7 Procedure for technical support 8
1.8 Copyright and Trademarks 8
1.9 Limitation of liability 9
1.10 Scan & Service application 10

2 Safety 11
2.1 Safety pictograms definition 11
2.2 Serial label location 12
2.3 Hazards 12
2.3.1 Personnel 12
2.3.2 Material 13
2.4 Hygiene and sanitization 13
2.4.1 Sanitary issues 13
2.4.2 Hygiene measures 13

3 Description 14
3.1 Technical specifications 14
3.2 Performance flow rate characteristics 16
3.3 Outline drawing 17
3.4 Components description and location 18
3.5 System regeneration cycle 20
3.5.1 Downflow regeneration cycle (5-cycles operation) 20
3.5.2 Upflow regeneration cycle (5-cycles operation) 22
3.5.3 Variable Refill/Brining regeneration cycle (5-cycles operation) 24
3.5.4 Filter cycle (3-cycles operation) 26
3.6 Configurations for downflow softener, upflow softener and filter 28
3.6.1 Downflow 28
3.6.2 Upflow 28
3.6.3 Filter 28
3.7 Options available on the valve 29

4 System sizing ... 30
4.1 Recommended Injector/DLFC/BLFC-Valve configuration ... 30
4.2 Sizing a softener (single unit) ... 30
4.2.1 Parameters to be considered ... 30
4.2.2 Determining the required volume of resin ... 31
4.2.3 Resin exchange capacity and capacity of the unit ... 32
4.2.4 Valve configuration ... 33
4.2.5 Cycle time calculation ... 34
4.3 Salt amount definition ... 36
4.4 Injector flow rates ... 36
4.4.1 1650 injectors ... 37
5 Installation ... 39
5.1 Warnings ... 39
5.2 Safety notices for installation ... 39
5.3 Installation environement ... 39
5.3.1 General ... 39
5.3.2 Water ... 40
5.3.3 Electrical ... 40
5.3.4 Mechanical ... 41
5.4 Integration constraints ... 41
5.5 Valve connection to piping ... 42
5.5.1 Top-mounted valve installation ... 42
5.6 Block diagram and configuration example ... 44
5.7 Regeneration flows ... 45
5.8 Electrical connections ... 46
5.9 Bypassing ... 47
5.10 Drain line connection ... 47
5.11 Overflow line connection ... 49
5.12 Brine line connection ... 50
6 Programming ... 51
6.1 Home screen ... 51
6.2 Touchscreen controller quick start ... 54
6.2.1 Quick start setting reference chart ... 54
6.2.2 Format screen ... 56
6.2.3 Assistance name screen ... 57
6.2.4 Assistance phone screen ... 57
6.2.5 Assistance interval screen ... 58
6.2.6 Day and time screen ... 59
6.2.7 User assistance screen ... 60
6.2.8 Settings screen ... 61
6.3 Master setting programming ... 62

6.3.1 Master setting screens ... 62
6.3.2 Master setting reference chart ... 64
6.3.3 Format screen ... 69
6.3.4 USB connection for field programming ... 70
6.3.5 Valve screen ... 71
6.3.6 Regeneration screen ... 75
6.3.7 Relay output screen ... 78
6.3.8 Meter screen ... 81
6.3.9 Settings review ... 82
6.3.10 Water Saver Regen screen ... 83
6.3.11 Remote Regeneration screen ... 83
6.3.12 Chlorine generation screen ... 84
6.3.13 Non-factory setting ... 84
6.4 Diagnostics ... 85
6.4.1 Error log ... 86
6.5 Resetting the controller ... 86
7 Commissioning ... 88
7.1 Water filling, draining and waterproofness inspection ... 88
7.2 Sanitization ... 89
7.2.1 Disinfection of water softeners ... 89
7.2.2 Sodium or calcium hypochlorite ... 89
7.2.3 Electro chlorination ... 90
8 Operation ... 91
8.1 Display during operation ... 91
8.2 Display during regeneration ... 91
8.3 Controller operation during programming ... 91
8.4 Manual regeneration ... 91
8.5 Operation during a power failure ... 92
8.6 Remote lockout ... 93
8.7 Sleep mode ... 93
9 Maintenance ... 94
9.1 General system inspection ... 94
9.1.1 Water quality ... 94
9.1.2 Mechanical Checks ... 94
9.1.3 Regeneration test ... 95
9.2 Recommended maintenance plan ... 96
9.2.1 Valve used for softening ... 96
9.2.2 Valve used for filtration ... 98
9.3 Recommendations ... 99
9.3.1 Use original spare parts ... 99
9.3.2 Use original approved lubricants ... 99
9.3.3 Maintenance instructions ... 99

9.4 Cleaning and maintenance 99
9.4.1 First steps 99
9.4.2 Controller motor replacement 100
9.4.3 Controller replacement 101
9.4.4 Power head disassembly/replacement 102
9.4.5 Piston and/or seal and spacer kit and /or brine valve replacement 103
9.4.6 Injector cleaning 105
9.4.7 BLFC cleaning 106
9.4.8 DLFC cleaning 107
9.4.9 Optical sensor replacement 108
9.4.10 Encoding wheel cleaning 109
9.4.11 Valve on tank assembly 110

10 Troubleshooting 111

10.1 Error detection 113
10.2 Error alerts 113

11 Spare parts and options 115

11.1 Valve parts list 115
11.2 Power head parts list 117
11.3 Safety brine valves list 118
11.4 Safety brine valves 2310 parts list 119
11.5 Bypass valve assembly list 120
11.5.1 Plastic bypass (no yoke) 120
11.5.2 1" BSP female stainless steel bypass 121
11.6 Distribution systems parts list 122
11.7 Air checks list 123
11.8 Meters parts list 124
11.9 CE compliance parts list 125

12 Disposal 126

1 Generalities

1.1 Scope of the documentation

The documentation provides the necessary information for appropriate use of the product. It informs the user to ensure efficient execution of the installation, operation or maintenance procedures.

The content of this document is based on the information available at the time of publication. The original version of the document was written in English.

For safety and environmental protection reasons, the safety instructions given in this documentation must be strictly followed.

This manual is a reference and will not include every system installation situation. The person installing this equipment should have:

- training in the Fleck series, XTR controllers and water softener installation;
- knowledge of water conditioning and how to determine proper controller settings;
- basic plumbing skills.

This document is available in other languages on https://www.pentairaquaeurope.com/product-finder/product-type/control-valves.

1.2 Release management

Revision	Date	Authors	Description
A	02.11.2016	BRY/ESA	First edition.
B	16.01.2018	BRY/FLA	Chapter 6 updates, add. cleaning BLFC procedure.
C	30.11.2018	BRY/FMI	Address change, Bleam information and valve on tank assembly.
D	18.09.2019	BRY	Quick start setting reference chart.
E	12.11.2019	BRY	Safety messages.

1.3 Manufacturer identifier, product

Manufacturer: Pentair International LLC
Avenue de Sevelin 18
1004 Lausanne
Switzerland

Product: Fleck 5800 XTR

1.4 Intended use

The device is intended for domestic applications use only and it is purpose-built for water treatment.

1.5 Abbreviations used

BLFC	Brine Line Flow Controller
BV	Brine Valve
DF	Down Flow
DLFC	Drain Line Flow Controller
Inj	Injector
QC	Quick Connect
Regen	Regeneration
S&S	Seals & Spacers
SBV	Safety Brine Valve
TC	Time Clock
UF	Up Flow

1.6 Norms

1.6.1 Applicable norms

Comply with the following guidelines:

- 2006/42/EC: Machinery Directive;
- 2014/35/UE: Low Voltage Directive;
- 2014/30/UE: Electromagnetic compatibility;
- 2011/65/UE: Restriction of use of certain hazardous substances in electrical and electronic equipment (RoHS);
- UNI EN ISO9001.

Meets the following technical standards:

- EN 55014-1;
- EN 55014-2;
- EN 61000-6-1;
- EN 61000-6-2;
- EN 61000-6-3;
- EN 61000-6-4;
- EN 61010-1;
- EN 61000-3-2;
- EN 61000-3-3.

1.6.2 Available certificates

- CE;
- DM174;
- ACS.

Please find beside the certifications for some of our product families. Please note that this list is not an exhaustive list of all our certifications. In case of need for more information please contact us.

1.7 Procedure for technical support

Procedure to follow for any technical support request:

1. Collect the required information for a technical assistance request.
   - ⇨ Product identification (see Serial label location [→Page 12] and Recommendations [→Page 99]);
   - ⇨ Description of the device problem.
2. Please refer to the Troubleshooting [→Page 111]. If the problem persists contact your supplier.

1.8 Copyright and Trademarks

All indicated Pentair trademarks and logos are property of Pentair. Third party registered and unregistered trademarks and logos are the property of their respective owners.

1.9 Limitation of liability

Pentair Quality System EMEA products benefit, under specific conditions, from a manufacturer warranty that may be invoked by Pentair's direct customers. Users should contact the vendor of this product for applicable conditions and in case of a potential warranty claim.

Any warranty provided by Pentair regarding the product will become invalid in case of:

- installation done by a non-water-professional;
- improper installation, improper programming, improper use, improper operation and/or maintenance leading to any kind of product damages;
- improper or unauthorized intervention on the controller or components;
- incorrect, improper or wrong connection/assembly of systems or products with this product and vice versa;
- use of a non-compatible lubricant, grease or chemicals of any type and not listed by the manufacturer as compatible for the product;
- failure due to wrong configuration and/or sizing.

Pentair accepts no liability for equipment installed by the user upstream or downstream of Pentair products, as well as for process/production processes which are installed and connected around or even related to the installation. Disturbances, failures, direct or indirect damages that are caused by such equipment or processes are also excluded from the warranty. Pentair shall not accept any liability for any loss or damage to profits, revenues, use, production, or contracts, or for any indirect, special or consequential loss or damage whatsoever. Please refer to the Pentair List Price for more information about terms and conditions applicable to this product.

1.10 Scan & Service application

Scan & Service mobile application is the ideal support for the maintenance person in his daily business. A simple scan of an identification (ID) label (**1**) present on the valve with a smartphone gives an instantaneously access to all updated information related to the product, such as:

- valve´s and tanks detailed configuration;
- manuals;
- spare parts lists;
- troubleshooting recommendations;
- multi-lingual videos, detailing how to best service a part;
- informations about new products, latest technologies, novelties about the Blue Network program, etc.

1. Download the application "Scan & Service" from Available on the App Store or Available on the Google play in a smartphone (**4**).
2. Open the application "Scan & Service".
3. Scan the bleam (**3**) stuck on the valve (**2**).
4. Navigate to find information.

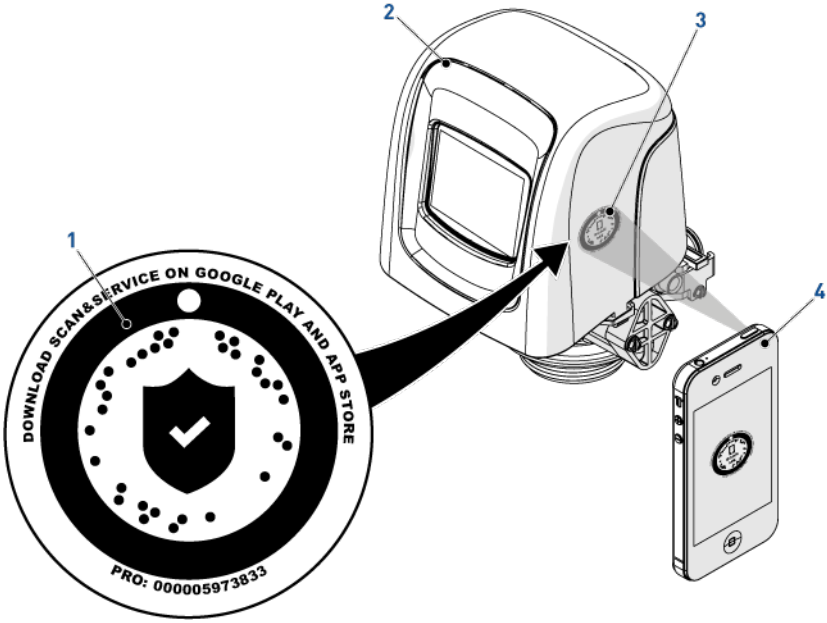

2 Safety

2.1 Safety pictograms definition

DANGER

This combination of symbol and keyword indicates an imminently hazardous situation that will result in serious or fatal injury if not avoided.

WARNING

This combination of symbol and keyword indicates a potentially hazardous situation that can result in serious or fatal injury if not avoided.

CAUTION

This combination of symbol and keyword indicates a potentially hazardous situation that can result in minimal or minor injury if not avoided.

Caution - material

This combination of symbol and keyword indicates a potentially hazardous situation that can result in material damage if not avoided.

Prohibition

Mandatory advice to follow.

Mandatory

Applicable guideline, measure.

Info

Informative comment.

2.2 Serial label location

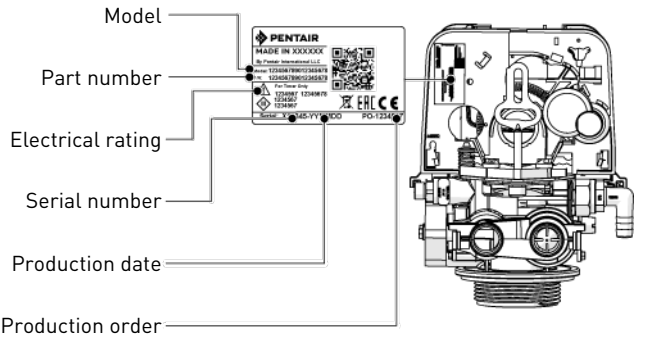

Mandatory

Ensure that the serial label and the safety labels on the device are completely legible and clean !

If necessary, replace them with new labels in the same positions.

2.3 Hazards

All the safety and protection instructions contained in this document must be observed in order to avoid temporary or permanent injury, damage to property or environmental pollution.

At the same time, any other legal regulations, accident prevention and environmental protection measures, as well as any recognized technical regulations relating to appropriate and risk-free methods of working which apply in the country and place of use of the device must be adhered to.

Any non-observation of the safety and protection rules, as well as any existing legal and technical regulations, will result in a risk of temporary or permanent injury, damage to property or environmental pollution.

2.3.1 Personnel

CAUTION

Risk of injury due to improper handling!

Only qualified and professional personnel, based on their training, experience and instruction as well as their knowledge of the regulations, safety rules and operations performed, are authorized to carry out necessary work.

2.3.2 Material

The following points must be observed to ensure proper operation of the system and the safety of user:

- be careful of high voltages present on the transformer (100 – 240 V);
- do not put your fingers in the system (risk of injuries with moving parts and shock due to electric voltage).

2.4 Hygiene and sanitization

2.4.1 Sanitary issues

Preliminary checks and storage

- Check the integrity of the packaging. Check that there is no damage and no signs of contact with liquid to make sure that no external contamination occurred;
- the packaging has a protective function and must be removed just before installation. For transportation and storage, appropriate measures should be adopted to prevent the contamination of materials or the objects themselves.

Assembly

- Assemble only with components which are in accordance with drinking water standards;
- after installation and before use, perform one or more manual regenerations in order to clean the media bed. During such operations, do not use the water for human consumption. Perform a disinfection of the system in the case of installations for treatment of drinking water for human use.

Info

This operation must be repeated in the case of ordinary and extraordinary maintenance. It should also be repeated whenever the system remains idle for a significant time.

Valid only for Italy

In case of equipment used in accordance with the DM25, apply all the signs and obligations arising from the DM25.

2.4.2 Hygiene measures

Disinfection

- The materials used for the construction of our products meet the standards for use with potable water; the manufacturing processes are also geared to preserving these criteria. However, the process of production, distribution, assembly and installation, may create conditions of bacterial proliferation, which may lead to odor problems and water contamination;
- it is therefore strongly recommended to sanitize the products. See Sanitization [→Page 89] ;
- maximum cleanliness is recommended during the assembly and installation;
- for disinfection, use Sodium or Calcium Hypochlorite and perform a manual regeneration.

3 Description

3.1 Technical specifications

Design specifications/ratings

Valve body	Fiber-reinforced polymer
Rubber components	EP/EPDM/silicone
Valve material certification	DM174, ACS, EC
Weight (valve with controller)	2 kg (max)
Recommended operating pressure	1.4 - 8.6 bar
Maximum inlet pressure	8.6 bar
Hydrostatic test pressure	20 bar
Water temperature	1 - 43°C
Ambient temperature	0 - 52°C

Flow rates (3.5 bar inlet - valve only)

Continuous service flow (Δp = 1 bar)	4.7 m^3/h
Peak service flow (Δp = 1.7 bar)	6.1 m^3/h
Cv*	5.4 gpm
Kv*	4.67 m^3/h
Maximum backwash flow (Δp = 1.8 bar)	3.8 m^3/h

*Cv: Flow rate in gpm across the valve at a pressure drop of 1 psi at 60°F.

*Kv: Flow rate in m^3/h across the valve at a pressure drop of 1 bar at 16°C.

Valve connections

Tank Thread	2½" - 8NPSM
Inlet/Outlet	¾" or 1"
Riser tube	26.7 mm O.D., 1.05" tube
Drain line	½" O.D.
Brine line (1650)	⅜"

Electrical

Transformer input voltage	100 to 240 VAC
Input supply frequency	50 to 60 Hz
Transformer output voltage	12 VDC
Motor input voltage	12 VDC
Controller input voltage	12 VDC
Controller max. power consumption	6 W
Protection rating	IP 22

Power supply	100 to 240 VAC, 50/60 Hz, 0.8 A, Class II
Transient overvoltages	Within the limits of category II
Pollution Degree	3

Temporary overvoltages must be limited in duration and in frequency.

Environmental conditions

- Indoor use only;
- temperature from 0°C to 52°C;
- maximum relative humidity 80% for temperatures up to 31°C decreasing linearly to 50% relative humidity at 40°C;
- mains supply voltage fluctuations up to ±10% of the nominal voltage.

3.2 Performance flow rate characteristics

The graph shows the pressure drop created by the valve itself at different flow rates. It allows predetermining the maximum flow rate going through the valve depending on the system settings (inlet pressure etc). It also allows to determine the valve pressure drop at a given flow rate, and therefore to evaluate the system pressure drop vs flow rate.

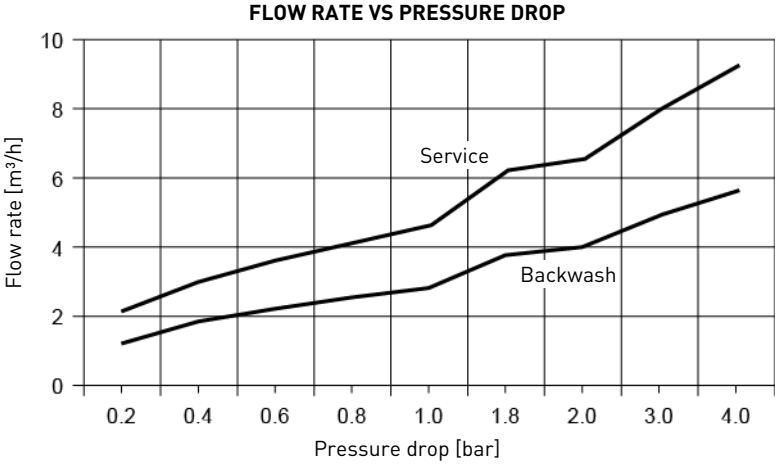

3.3 Outline drawing

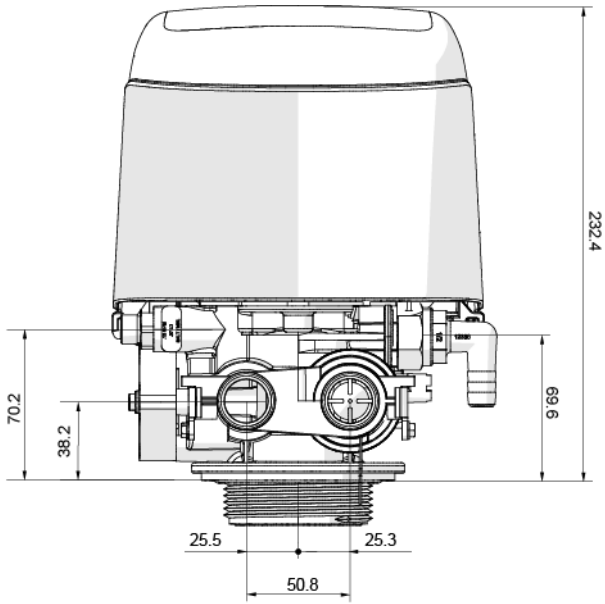

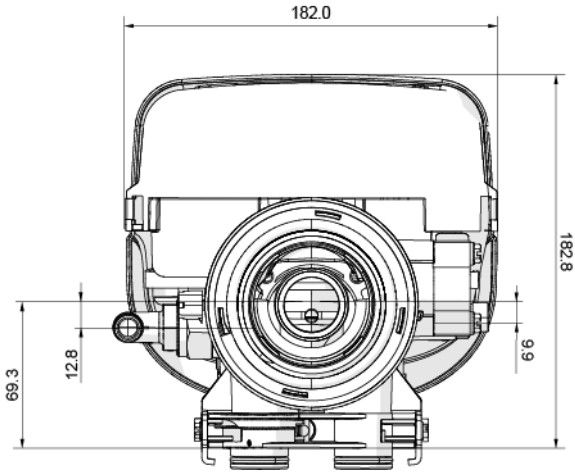

3.4 Components description and location

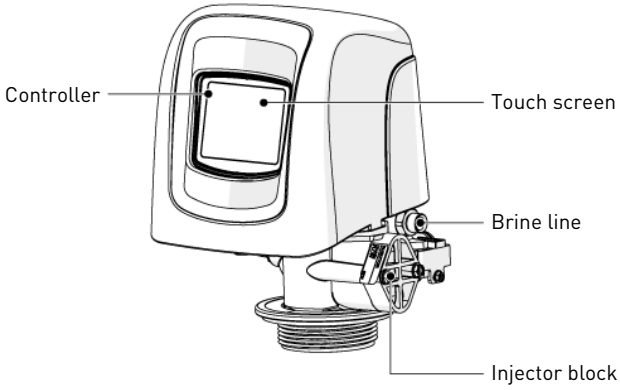

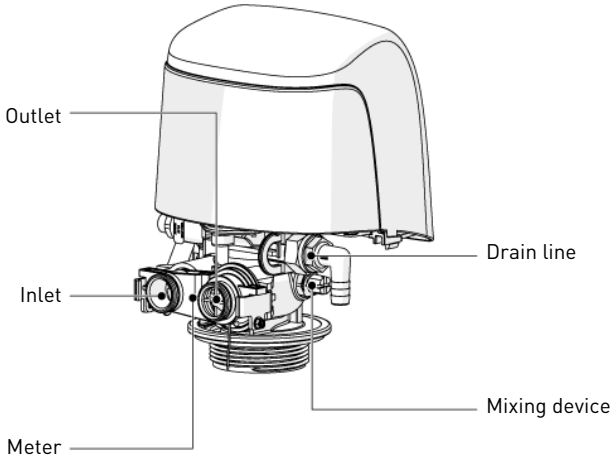

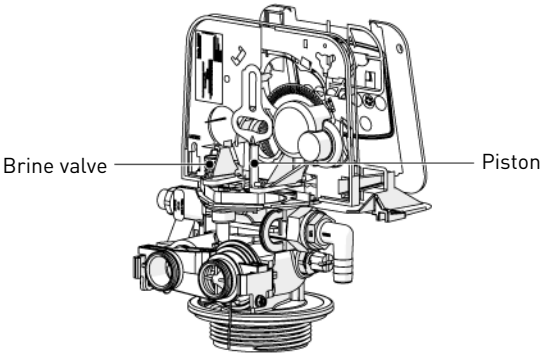
Brine valve
Piston

3.5 System regeneration cycle

Info

This valve allows to do filtration, down flow and up flow regenerations.

3.5.1 Downflow regeneration cycle (5-cycles operation)

Service — normal use

Untreated water is directed down through the resin bed and up through the riser tube. The hardness ions attach themselves to the resin and are removed from the raw water being exchanged on the resin beads by sodium ions. The water is conditioned as it passes through the resin bed.

Backwash — cycle C1

The flow of water is reversed by the valve and directed down the riser tube and up through the resin bed. During the backwash cycle, the bed is expanded and debris is flushed to the drain, while the media bed is remixed.

Brine draw & slow rinse — cycles C2

The valve directs water through the brine injector and brine is drawn from the brine tank. The brine is then directed down through the resin bed and up through the riser tube to the drain. The hardness ions on the resin beads are replaced by sodium ions and are sent to the drain. The resin is regenerated during the brine cycle. When the air check valve closes brine drawing finishes, and then the slow rinse phase starts.

Rapid rinse — cycle C3

The valve directs water down through the resin bed and up through the riser tube to the drain. Any residual brine is rinsed from the resin bed, while the media bed is re-compacted.

Brine tank refill — cycle C4

Water is directed to the brine tank, at a rate controlled by the refill controller [BLFC], to create brine for the next regeneration. During brine refill, treated water is already available at the valve outlet.

Info

For illustration purpose only. Always verify inlet and outlet marking on the valve.

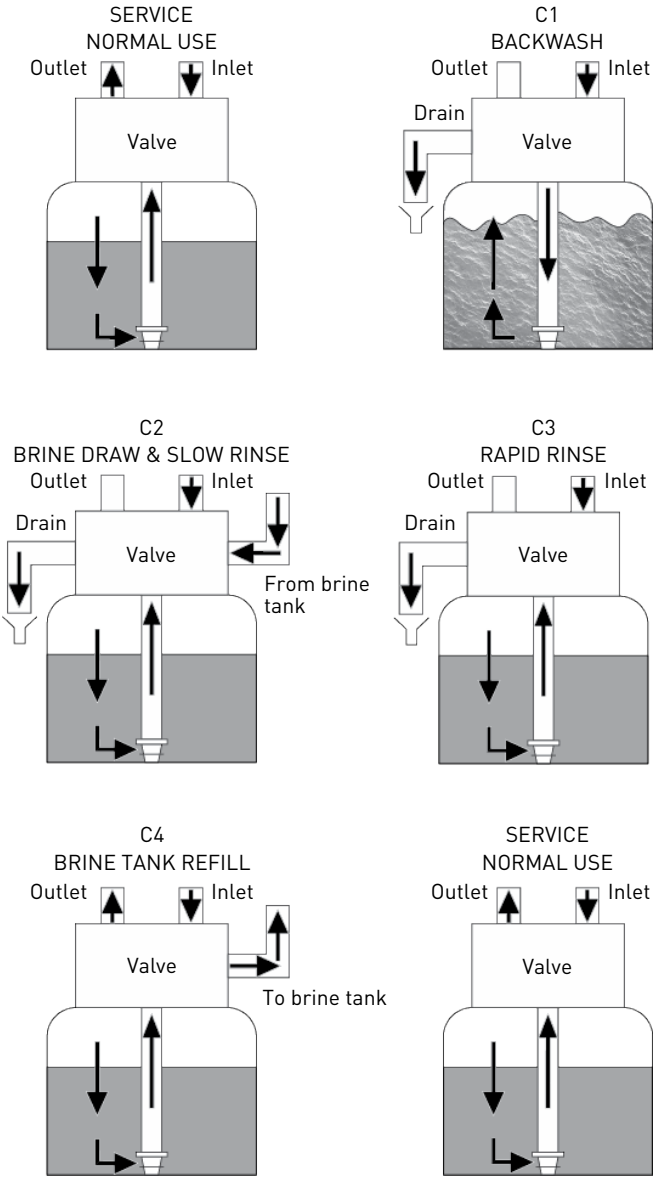
SERVICE
NORMAL USE
Outlet
Inlet
Valve
C1
BACKWASH
Outlet
Inlet
Drain
Valve
C2
BRINE DRAW & SLOW RINSE
Outlet
Inlet
Drain
Valve
From brine tank
C3
RAPID RINSE
Outlet
Inlet
Drain
Valve
C4
BRINE TANK REFILL
Outlet
Inlet
Valve
To brine tank
SERVICE
NORMAL USE
Outlet
Inlet
Valve

3.5.2 Upflow regeneration cycle (5-cycles operation)

Service — normal use

Untreated water is directed down through the resin bed and up through the riser tube. The hardness ions attach themselves to the resin and are removed from the raw water being exchanged on the resin beads against sodium ions. The water is conditioned as it passes through the resin bed.

Brine draw & slow rinse — cycle C1

The controller directs water through the brine injector and brine is drawn from the brine tank. The brine is then directed down through the riser tube and up through the resin bed to the drain. The hardness ions are replaced by sodium ions and are sent to the drain. The resin is regenerated during the brine cycle. Then the slow rinse phase starts.

Backwash — cycle C2

The flow of water is reversed by the valve and directed down through the riser tube and up through the resin bed. During the backwash cycle, the bed is expanded and debris is flushed to the drain, while the media bed is remixed.

Rapid rinse — cycle C3

The controller valve directs water down through the resin bed and up through the riser tube to the drain. Any residual brine is rinsed from the resin bed, while the media bed is recompacted.

Brine tank refill — cycle C4

Water is directed to the brine tank, at a rate controlled by the refill controller [BLFC], to create brine for the next regeneration. During brine refill, treated water is already available at the valve outlet.

Info

For illustration purpose only. Always verify inlet and outlet marking on the valve.

SERVICE
NORMAL USE

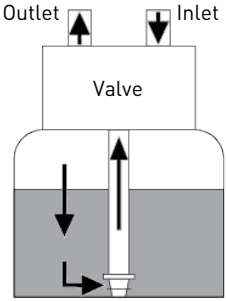

C1
BRINE DRAW & SLOW RINSE

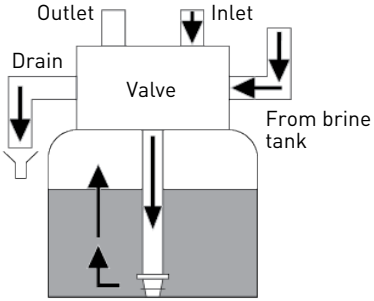

C2
BACKWASH

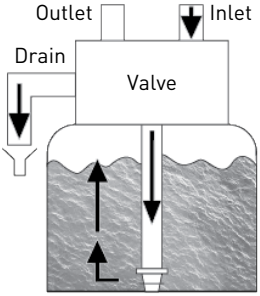

C3
RAPID RINSE

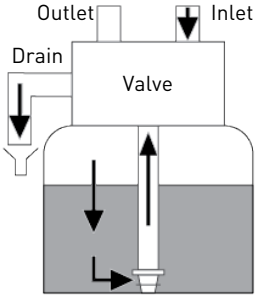

C4
BRINE REFILL

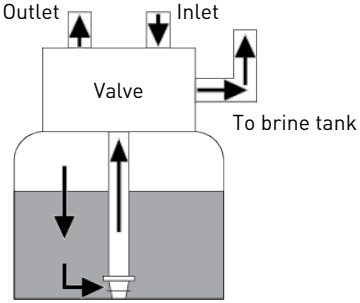

SERVICE
NORMAL USE

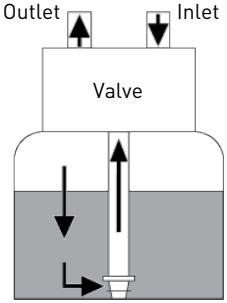

3.5.3 Variable Refill/Brining regeneration cycle (5-cycles operation)

Service — normal use

Untreated water is directed down through the resin bed and up through the riser tube. The hardness ions attach themselves to the resin and are removed from the raw water being exchanged on the resin beads against sodium ions. The water is conditioned as it passes through the resin bed.

Brine tank refill — cycle C1

Water is directed to the brine tank, at a rate controlled by the refill controller [BLFC], to create brine for the next regeneration. Refill duration is calculated by the controller on the basis of real resin consumption. During brine refill, treated water is available at the valve outlet.

Service — cycle C2

After the refill, the valve comes back in to service position and stays as long as needed for brine saturation.

Brine draw & slow rinse — cycle C3

The valve directs water through the brine injector and brine is drawn from the brine tank. The brine is then directed down through the riser tube and up through the resin bed to the drain. The hardness ions are replaced by sodium ions and are sent to the drain. The resin is regenerated during the brine cycle. Then the slow rinse phase starts.

Backwash — cycle C4

The flow of water is reversed by the valve and directed down through the riser tube and up through the resin bed. During the backwash cycle, the bed is expanded and debris is flushed to the drain, while the media bed is remixed.

Rapid rinse — cycle C5

The valve directs water down through the resin bed and up through the riser tube to the drain. Any residual brine is rinsed from the resin bed, while the media bed is recompacted.

Info

For illustration purpose only. Always verify inlet and outlet marking on the valve.

SERVICE
NORMAL USE

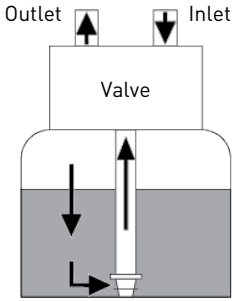

C1
BRINE REFIL

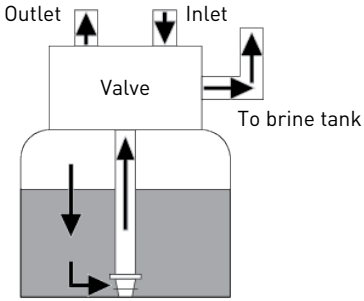

C2
SERVICE

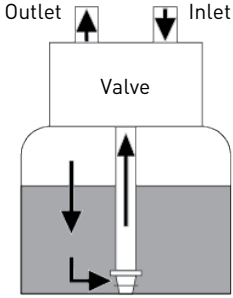

C3
BRINE DRAW & SLOW RINSE

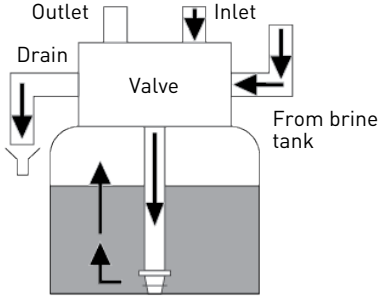

C4
BACKWASH

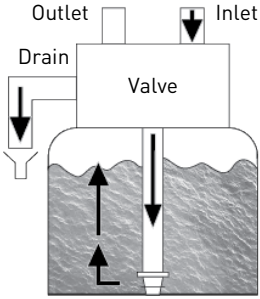

C5
RAPID RINSE

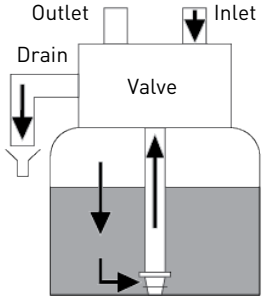

3.5.4 Filter cycle (3-cycles operation)

Service — normal use

Untreated water is directed down through the filter media and up through the riser tube. The impurities are retained by the media. The water is filtered as it passes through the media.

Backwash — cycle C1

The flow of water is reversed by the valve and directed down through the riser tube and up through the filter media. During the backwash cycle, the filter bed is expanded and debris is flushed to the drain, while the media bed is remixed.

Rapid rinse — cycle C2

The valve directs water down through the filter media and up through the riser tube to the drain. The media bed is getting re-compacted.

Info

For illustration purpose only. Always verify inlet and outlet marking on the valve.

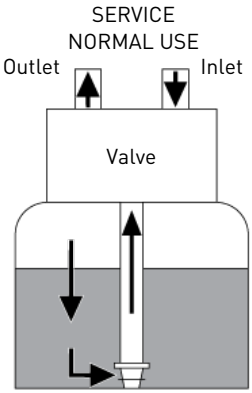
SERVICE
NORMAL USE
Outlet
Inlet
Valve

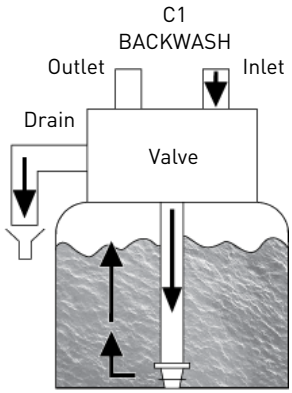
C1
BACKWASH
Outlet
Inlet
Drain
Valve

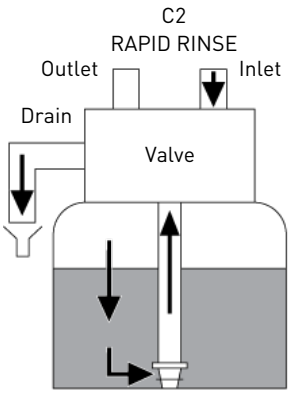
C2
RAPID RINSE
Outlet
Inlet
Drain
Valve

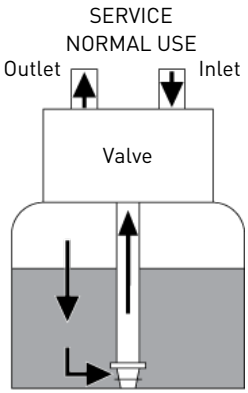
SERVICE
NORMAL USE
Outlet
Inlet
Valve

3.6 Configurations for downflow softener, upflow softener and filter

3.6.1 Downflow

The valve is mounted with the **DF** piston kit, part number BR61837.

The injector is in the upper hole and the plug in the lower hole.

3.6.2 Upflow

The valve is mounted with the **UF** piston kit, part number BR61838.

The injector is in the lower hole and the plug in the upper hole.

Info

For upflow configuration, the injector cap is fitted with a pressure regulator.

3.6.3 Filter

A plug is placed in both holes.

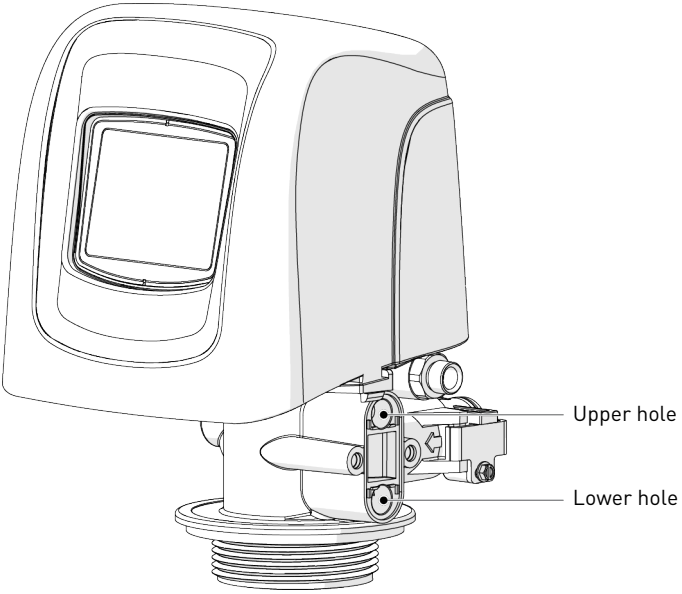

3.7 Options available on the valve

Mixing device

The valve can be equipped with a mixing device (**1**) whose function is to regulate the hardness of the water at the outlet. The mixing can be set from 0% to 50% of hard water (i.e. 0 turn = 0% of hard water with 100% of treated water and 1-½ turn = 50% of hard water with 50% of treated water).

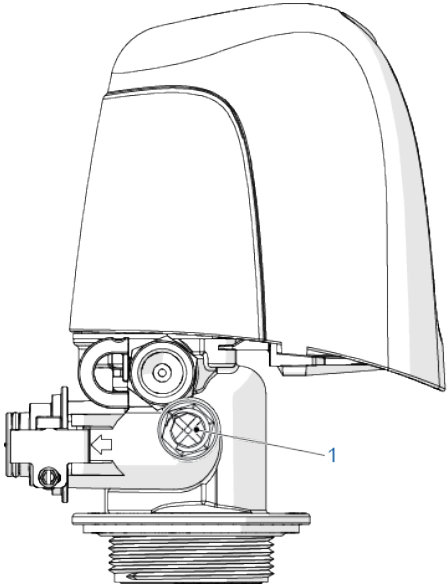

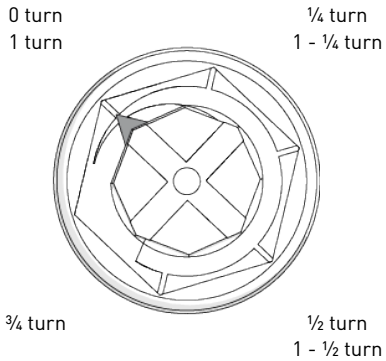

4 System sizing

4.1 Recommended Injector/DLFC/BLFC-Valve configuration

Brine syst.	Tank Diameter	Resin volume	Injector				DLFC	BLFC	
	[in]	L	DF	Color	UF	Color	[gpm]	DF [gpm]	UF [gpm]
5800/ 1650	4	4	0	Red	0000	Black	0.8	0.125	0.125
	6	5 - 7			000	Brown	1.2		
	7	8 - 14							
	8	9 - 21	1	White	00	Violet	1.5	0.25	
	9	22 - 28					2		
	10	29 - 42			0	Red	2.4		0.25
	12	43 - 56	2	Blue	1	White	3.5	0.50	
	13	57 - 70					4		
	14	71- 85	3	Yellow	2	Blue	5		0.50
	16	86 - 113					7		

Info

In upflow configuration, the injector cap is fitted with a pressure regulator set to 1.4 or 2 bar.

4.2 Sizing a softener (single unit)

4.2.1 Parameters to be considered

Whenever installing a softener, it is preferable to have full water analysis to ensure the inlet water content will not affect the resin bed.

Tip

Please consult your resin manufacturer specification !

To ensure that no additional pretreatment prior to softening is required.

The below sizing method can be applied for both residential and industrial softeners.

The sizing of a softener must be based upon certain parameters:

- inlet water hardness;
- peak flow rate and nominal flow rate;
- service velocity;
- salt dosage.

The softening and regeneration reactions are driven under certain conditions. To allow these reactions to take place, make sure that the velocity is convenient during the different phases for proper ion exchange. This velocity is given in the resin manufacturer specifications sheet.

Depending on the inlet water hardness, the service velocity for standard softening must be between:

Service velocity [bed volume per hour]	Inlet water hardness [mg/l as $CaCO_3$]	°f °TH	°dH
8 - 40	<350	<35	<19.6
8 - 30	350 to 450	35 - 45	19.6 - 25.2
8 - 20	>450	>45	>25.2

Caution - material

Risk of leakage due to unrespected service velocity !

Failure to respect the service velocity will lead to hardness leakage or even total softener inefficiency.

Note that the water supply piping size may also be useful when estimating the nominal flow rate, since the size of the piping allows a maximum flow rate to pass. Assuming the maximum velocity of water in pipes is about 3 m/s, a good estimation for most common pressure [3 bar] and temperature [16°C] is:

Piping size (internal diameter)		Max. flow rate
[in]	[mm]	[m^3/h at 3 m/s]
0.5	12	1.22
0.75	20	3.39
1	25	5.73
1.25	32	8.69
1.5	40	13.57
2.0	50	21.20
2.5	63	34.2
3.0	75	49.2

4.2.2 Determining the required volume of resin

When sizing a softener, make sure that the volume of resin in the tank (bed volume) will be sufficient so that even when the peak flow rate is reached, the velocity is still between the above values depending on the hardness. When sizing a softener, always choose the resin volume and tank size based on the peak flow rate but not on the nominal flow rate.

Caution - material

Risk of leakage due to wrong sizing !

Sizing on the nominal flow rate without taking the peak flow rate into account would result in choosing smaller tank size and resin volume, and may lead in severe hardness leakage during the service cycle when the peak flow is reached.

The maximum softened water flow rate that a softener can produce is given by the following formula:

$Q_{service\ max} = Fs_{service} \times BV$

with:

$Q_{service\ max}$: service flow rate [m^3/h]

$Fs_{service}$: service velocity [BV/h]

BV: bed volume of resin [m^3]

Knowing this required volume of resin, it is possible now to determine the needed tank. Note that at least a third of the total volume of the tank must be kept as free space so that the bed expansion during backwash is sufficient to ensure correct cleaning of the resin.

4.2.3 Resin exchange capacity and capacity of the unit

The resin exchange capacity and capacity of the unit are two different things that should not be confused. The resin exchange capacity is the amount of Ca^2+ and Mg^2+ that can be retained by 1 litre of resin, which will depend on the resin type and salt dosage, whereas the capacity of the unit is the capacity of the system, which will depend on the volume of resin and resin exchange capacity.

Knowing the required volume of resin, it is possible to determine the exchange capacity of the unit. The capacity of the unit can be expressed in different ways:

- the mass capacity, which corresponds to the weight in equivalent $CaCO_3$ that can be fixed on the resin, expressed in kg as $CaCO_3$;
- the volume capacity, which represents the maximum amount of water that can be treated between 2 regenerations. This last capacity takes into account the hardness of the water to be treated and is expressed in m^3 or litre;
- the combined capacity, which represents the volume of water that could be treated between 2 regenerations if the inlet hardness is 1 °f or °dH. This capacity is expressed in °f.m^3 or °dH.m^3.

The resin exchange capacity will depend on the amount of salt to be injected into the resin bed during the regeneration. This amount of salt is given in grams per litre of resin. The next table is showing the resin exchange capacity in function of the amount of salt for a system with standard efficiency regeneration.

Resin exchange capacity as a function of the salt dosage:

Salt amount [g/L_{resin}]	Corresponding resin exchange capacity [g/L_{resin}] as $CaCO_3$	°f.m^3 [per L_{resin}]	°dH.m^3 [per L_{resin}]
50	29.9	2.99	1.67
60	34	3.4	1.9
70	37.5	3.75	2.09
80	40.6	4.06	2.27
90	43.4	4.34	2.42
100	45.9	4.59	2.56
110	48.2	4.82	2.69
120	50.2	5.02	2.8
130	52.1	5.21	2.91

Salt amount [g/L_{resin}]	Corresponding resin exchange capacity [g/L_{resin}] as $CaCO_3$	°f.m^3 [per L_{resin}]	°dH.m^3 [per L_{resin}]
140	53.8	5.38	3.01
150	55.5	5.55	3.1
170	58.5	5.85	3.27
200	62.7	6.27	3.5
230	66.9	6.69	3.74
260	71	7.1	3.97
290	75.3	7.53	4.21

To calculate the system mass capacity:

$M_{capacity} = V_{resin} \times C_{resin\ ex}$

with:

$M_{capacity}$: system mass capacity [g as $CaCO_3$]

V_{resin}: volume of resin [L]

$C_{resin\ ex}$: resin exchange capacity [g/L_{resin} as $CaCO_3$]

To calculate the system combined capacity:

$C_{capacity} = V_{resin} \times C_{cor\ resin\ ex}$

with:

$C_{capacity}$: system combined capacity [°f.m^3 or °dH.m^3]

V_{resin}: volume of resin [L]

$C_{cor\ resin\ ex}$: corresponding resin exchange capacity [°f.m^3/l or °dH.m^3/l]

To calculate the system volume capacity:

$V_{capacity} = M_{capacity} / TH_{inlet}$

Or

$V_{capacity} = C_{capacity} / TH_{inlet}$

with:

$V_{capacity}$: system volume capacity [m^3]

$M_{capacity}$: system mass capacity [g as $CaCO^3$]

$C_{capacity}$: system combined capacity [°f.m^3 or °dH.m^3]

TH_{inlet}: inlet water hardness [mg/L as $CaCO_3$ or °f or °dH]

Mandatory

If a mixing device is set on the valve before meter, use TH = TH_{INLET} - TH_{OUTLET} !

Having determined the previous capacity allows the operator to know the service cycle duration.

4.2.4 Valve configuration

Knowing the volume of resin, tank size and specifications of the resin, it is possible to determine the required valve configuration. The resin specification will give the backwash velocity, as well as the brine draw and slow rinse velocity that must be respected in order to ensure a proper

regeneration of the unit. From this data, determine the required backwash flow rate as well as the brine draw and slow rinse flow rate. In most cases, the fast rinse flow rate will be the same as the backwash flow rate, however for certain valve types the fast rinse flow rate will be the same as the service flow rate.

To determine the backwash flow rate:

$Q_{backwash} = Fs_{backwash} \times S$

with:

$Q_{backwash}$: backwash flow rate [m^3/h]

$Fs_{backwash}$: backwash velocity [m/h]

S: Tank cross section area [m^2]

The DLFC installed on the valve has to limit the backwash flow rate to the above calculated flow rate.

To determine the injector size:

The velocities to be respected for brine draw and slow rinse are given on the resin manufacturer specifications. Generally speaking, the injector has to allow a flow rate of about 4BV / h (corresponding to the flow rate of brine being drawn added to the flow rate of raw water passing through the injector nozzle to create the suction effect).

$Q_{inj} = 4 \times BV / h$

with:

Q_{inj}: total flow rate passing through the injector [L/h]

BV: bed volume of resin [L]

Info

This value does not correspond to the brine draw flow rate but to the total flow rate passing through the injector.

Refer to the injector diagrams at the inlet pressure in order to check if the injector will give a correct flow rate.

See chapters Salt amount definition [→Page 36] and Injector flow rates [→Page 36].

4.2.5 Cycle time calculation

From this point, the volume of resin, the tank size, the capacity of the softener and the valve configuration are determined. Next step is to calculate the regeneration cycle duration, which depends on the valve configuration and once again on the resin specifications.

Info

Preprogrammed cycle times are only factory default programming that need to be adjusted to fit the system requirements.

For cycle time calculation the valve configuration must be known, which depends on:

- the tank size;
- the resin specifications for the velocity for backwashing the resin bed;
- the velocity of water for brine draw, slow rinse and fast rinse.

Further information needed for cycle time calculation are:

- the resin volume previously determined;
- the salt amount used per regeneration;
- the volume of water to use for backwash, brine draw, slow rinse and fast rinse.

To calculate the backwash duration:

$Tb_{ackwash} = (N_{BVbw} \times BV) / Q_{DLFC}$

with:

$T_{backwash}$: backwash duration [min]

N_{BVbw}: number of bed volume for backwash

BV: bed volume [L]

Q_{DLFC}: drain line flow controller size [L/min]

Info

The typical value of the volume of water to be used for backwash is between 1.5 and 4 times the bed volume, depending on the inlet water quality.

To calculate the brine draw duration:

Knowing the injector draw flow rate at the working pressure:

$T_{brine\ draw} = V_{brine} / Q_{draw}$

with:

$T_{brine\ draw}$: brine draw duration [min]

V_{brine}: brine volume to be drawn [L], see Refill calculation [→Page 36].

Q_{draw}: injection draw flow rate [L/min]

Tip

Multiply the amount of salt in kg by 3 to get a approximation of the brine volume to draw !

To calculate slow rinse duration:

The volume of water to be used for slow rinse is given in the resin manufacturers specifications. Generally speaking, it is advised that between 2 and 4 BV of water is used to perform the slow rinse after brine draw. The slow rinse cycle allows brine to be pushed slowly through the resin bed, allowing the resin to be in contact with brine for sufficient time and therefore to be regenerated.

Refer to the injector curve at the common working pressure to determine the slow rinse duration.

$T_{slow\ rinse} = (N_{BVsr} \times BV) / Q_{SR}$

with:

$T_{slow\ rinse}$: slow rinse duration [min]

N_{BVsr}: number of bed volume for slow rinse

BV: bed volume [L]

Q_{SR}: injector slow rinse flow rate [L/min]

To calculate fast rinse duration:

The fast rinse is aimed at eliminating an excess of salt in the resin bed and also recompacting the resin in the tank.

Depending on the valve type, the fast rinse flow rate is controlled by the DLFC or it has about the same flow rate as in service. The fast rinse velocity can be the same as the service velocity, and the volume of water to be used for the fast rinse is generally between 1 and 10 BV depending on the salt dosage.

$T_{fast\ rinse} = (N_{BVfr} \times BV) / Q_{DLFC}$

with:

$T_{fast\ rinse}$: fast rinse duration [min]

N_{BVfr}: number of bed volume for fast rinse

BV: bed volume [L]

Q_{DLFC}: drain line flow controller size [L/min]

To calculate the refill duration:

The refill flow rate is controlled by the refill controller (BLFC). The relation between the BLFC size, the tank size and the resin volume is given in the valve specifications.

To calculate the refill duration:

$T_{refill} = V_{WB} / Q_{BLFC}$

with:

T_{refill}: refill duration [min]

V_{WB}: Volume of water to be refill to prepare the brine [L]

Q_{BLFC}: BLFC size [L/min]

$V_{WB} = D_{Salt} \times BV / S_{sol}$

with:

V_{WB}: Volume of water to be refill to prepare the brine [L]

D_{Salt}: Salt dosage per litre of resin [g/L]

BV: Bed volume [L]

S_{sol}: 360g/L - Solubility of salt per litre of water

Tip

When calculating the time required to draw the brine, take into account that the volume of brine [Vbrine] will be 1.125 bigger than the volume of water refilled !

4.3 Salt amount definition

The salt settings are controlled through the controller programming. See Resin exchange capacity and capacity of the unit [→Page 32].

4.4 Injector flow rates

The following graphics represent the injectors flow rate as a function of the inlet pressure for the different injector sizes.

4.4.1 1650 injectors

INJECTOR 000

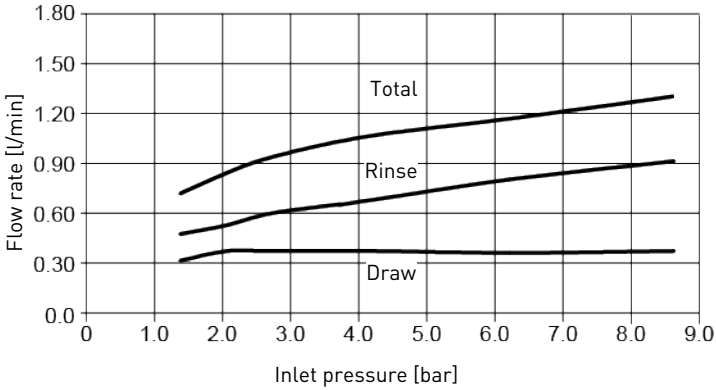

INJECTOR 00

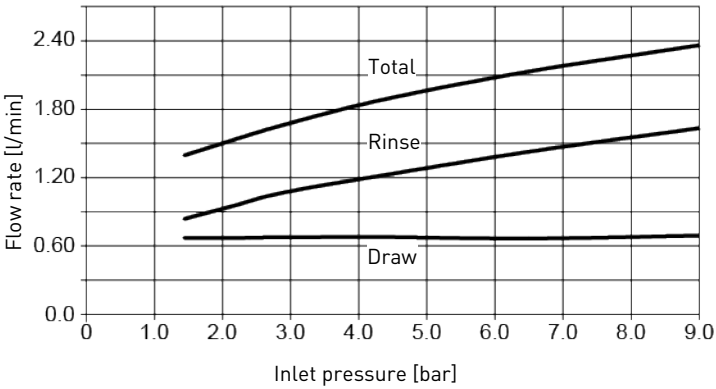

INJECTOR 0

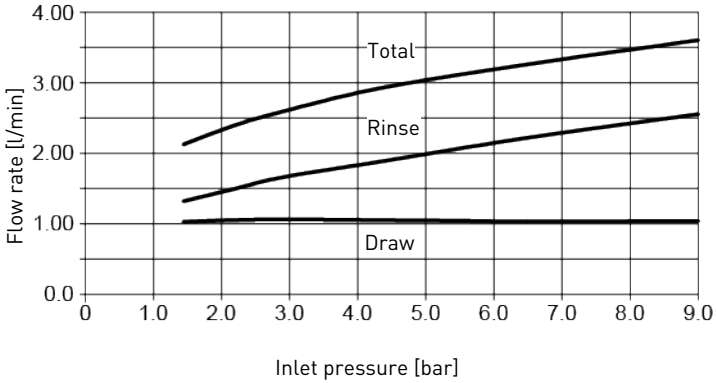

INJECTOR 1

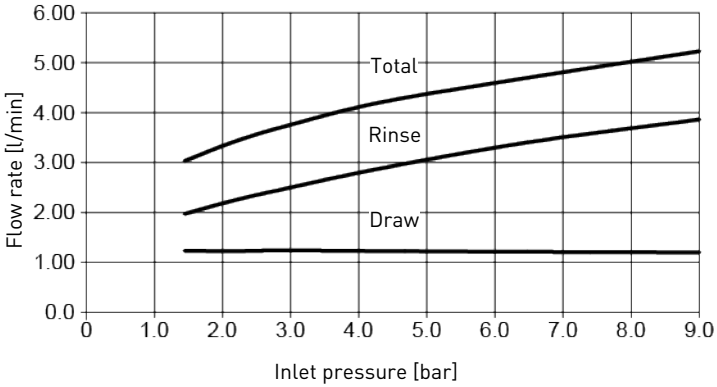

INJECTOR 2

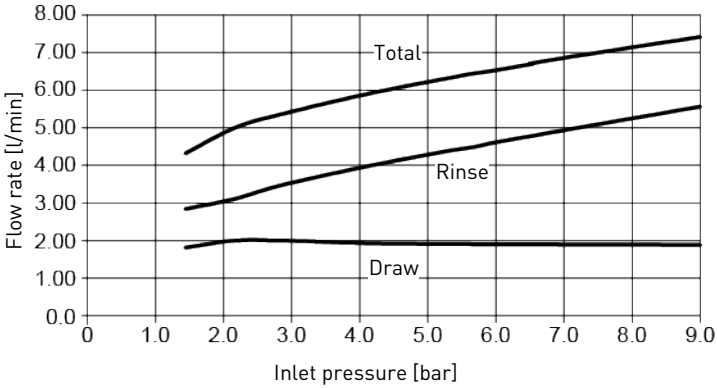

INJECTOR 3

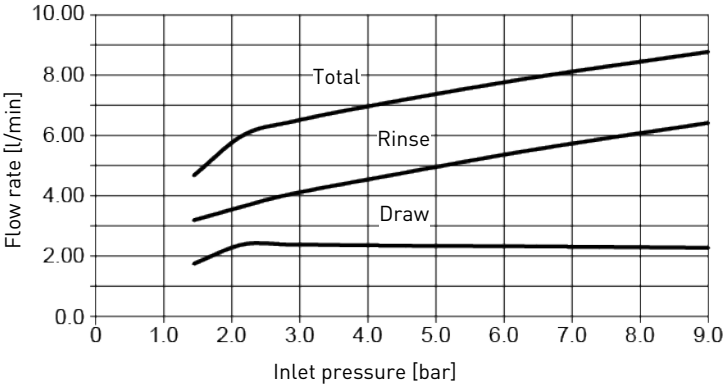

5 Installation

CAUTION

Risk of injury due to electrical shock or pressurized elements !

It is strictly forbidden for not qualified personal, to accede to system's internal parts to perform any kind of technical action.

Be sure to disconnect the electrical power, close the water inlet and depressurize the system before opening the front cover to access internal parts !

5.1 Warnings

The manufacturer will not be held liable for any damages to people or properties resulting from an improper use of the device not compliant with the following instructions.

Whenever this guide doesn't clarify all doubts about installation, service or maintenance, please contact the technical support of the company that has installed the device.

Device installation must be done by a qualified technician according to the current standards and regulations, using tools compliant with a device for a safety use and referring to that technician also for device maintenance.

In case of out of order or malfunction, before performing any kind of action on the device, please ensure to have disconnected the transformer from the power source, to shut off inlet water supply to the valve and to drain water pressure opening a tap down-line of the valve.

1. Be careful when removing the valve from the box and during subsequent handling, weight is liable to cause damage to property and persons in case of accidental impact.
2. Before sending the water on the valve, make sure that all plumbing connections are tight and properly implemented in order to avoid dangerous leaks of pressurized water.
3. Use caution when installing welded metal piping near the valve, the heat may damage the plastic body of the valve and the bypass.
4. Be careful not to let the full weight of the valve on fittings, pipes or bypass.
5. Make sure that the environment in which the valve is installed does not reach freezing temperatures of the water, the valve may be damaged.
6. Make sure that the tank containing the resin is vertical; otherwise the resin could enter in the valve and damage it.

5.2 Safety notices for installation

- Observe all warnings that appear in this manual;
- only qualified and professional personnel are authorized to carry out installation work.

5.3 Installation environement

5.3.1 General

- Use only brine salts designed for water softening. Do not use ice melt, block, or rock salts;

- keep the media tank in an upright position. Do not turn on its side, upside down, or drop it. Turning the tank upside down may cause media to enter the valve or might clog the upper screen;
- follow State and local codes for water testing. Do not use water that is micro-biologically unsafe or of unknown quality;
- when filling the media tank with water, first place the valve in the backwash position, then partly open the valve. Fill the tank slowly to prevent media from exiting the tank;
- when installing the water connection (bypass or manifold), first connect to the plumbing system. Allow heated parts to cool and cemented parts to set before installing any plastic parts. Do not get primer or solvent on O-rings, nuts, or the valve.

5.3.2 Water

- Water temperature must not exceed 43°C;
- a minimum of 1.4 bar (dynamic pressure on injector) of water pressure is required for the valve to operate effectively.

Mandatory

Do not exceed a maximum of 8.6 bar inlet pressure. In such cases, it is necessary to install a pressure regulator upstream the system.

5.3.3 Electrical

There are no user-serviceable parts in the AC/AC or AC/DC transformer, motor, or controller. In the event of a failure, these should be replaced.

- All electrical connections must be completed according to local codes;
- use only the power AC/AC or AC/DC transformer that is supplied;

Mandatory

The use of any other power transformer than the one supplied void the warranty of all electronic parts of the valve !

- the power outlet must be grounded;
- to disconnect power, unplug the AC/AC or AC/DC transformer from its power source;
- an uninterrupted current supply is required. Please make sure that the voltage supply is compatible with the unit before installation;
- make sure the controller power source is plugged in;
- if the electrical cable is damaged, it is imperative that it is replaced by a qualified personnel.

5.3.4 Mechanical

Caution - material

Risk of damage due to wrong lubricant use !

Do not use petroleum-based lubricants such as Vaseline, oils, or hydrocarbon-basedlubricants.

Do not use silicon grease.

Use only P-80® Emulsion lubricant (water based lubricant) !

- All plastic connections should be hand-tightened. PTFE (plumber's tape) may be used on connections that do not use an O-ring seal. Do not use pliers or pipe wrenches;
- existing plumbing should be in a good shape and free from limescale. In case of doubt, it is preferable to replace it;
- all plumbing must be completed according to local codes and installed without tension or bending stresses;
- soldering near the drain line should be done before connecting the drain line to the valve. Excessive heat will cause interior damage to the valve;
- do not use lead-based solder for sweat solder connections;
- the riser tube should be cut flush with the top of the tank. Slightly bevel the ridge in order to avoid deterioration of the seal whilst fitting the valve;
- the drain line must be a minimum of 12.7 mm (½") in diameter. Use 19 mm (¾") pipe if the backwash flow rate is greater than 26.5 lpm or the pipe length is greater than 6 m;
- do not support the weight of the system on the valve fittings, plumbing, or the bypass;
- it is not recommended to use sealants on the threads. Use PTFE (plumber's tape) on the threads of the drain elbow, and other NPT/BSP threads;
- the installation of a pre-filter is always recommended (100µ nominal);
- valve inlet/outlet must be connected to main piping via flexible.

5.4 Integration constraints

Location of a water treatment system is important. The following conditions are required:

- flat and firm level platform or floor;
- room to access equipment for maintenance and adding brine (salt) to tank;
- constant electrical supply to operate the controller;
- total minimum pipe run to water heater of 3 m (10 ft) to prevent backup of HW into system;
- always install check valve before water heater to protect the softener from HW return;
- local drain for discharge as close as possible;
- water line connections with shut off or bypass valves;
- must meet any local and state codes for site of installation;
- valve is designed for minor plumbing misalignments. Do not support weight of system on the plumbing;

- be sure all soldered pipes are fully cooled before attaching plastic valve to the plumbing.

5.5 Valve connection to piping

The connections should be hand tightened using PTFE (plumber's tape) on the threads if using the threaded connection type.

In case of heat welding (metal type connection), the connections should not be made to the valve when soldering.

Tip

See chapter Components description and location [→Page 18] to identify the connections.

When pressurized, any composite tank will expand both vertically and circumferential. In order to compensate the vertical expansion, the piping connections to the valve must be flexible enough to avoid overstress on the valve and tank.

5.5.1 Top-mounted valve installation

The valve and tank should not be supporting any part of the piping weight. This is hence compulsory to have the piping fixed to a rigid structure (e.g. frame, skid, wall...) so that the weight of it is not applying any stress on the valve and tank.

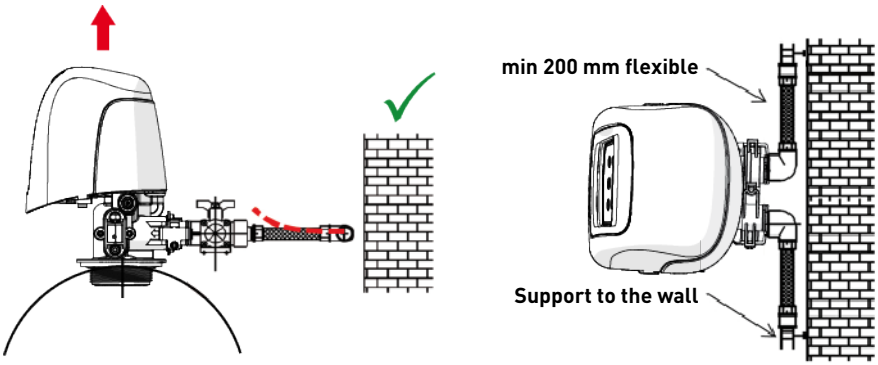

- The diagrams above illustrate how the flexible piping connection should be mounted;
- in order to adequately compensate the tank elongation the flexible tubes must be installed **horizontally**;
- should the flexible piping connection be installed in vertical position, instead of compensating the elongation, it will create additional stresses on the valve & tank assembly. Therefore this is to be avoided;
- the flexible piping connection must also be installed stretched, avoiding excessive length. For instance 20 – 40 cm is enough;
- excessively long and non-stretched flexible piping connection will create stresses on the valve and tank assembly when the system is pressurized, as illustrated in the below picture: on the left the assembly when the system is unpressurised, on the right the flexible piping connection when put under pressure tends to lift up the valve when stretching up. This configuration is even more dramatic when using semi-flexible piping;

- failure to provide enough vertical compensation may lead to different kinds of damage, either on the valve thread which is connected to the tank, or on the female thread connection of the tank. In some cases, damage may also be seen on the valve inlet and outlet connections;

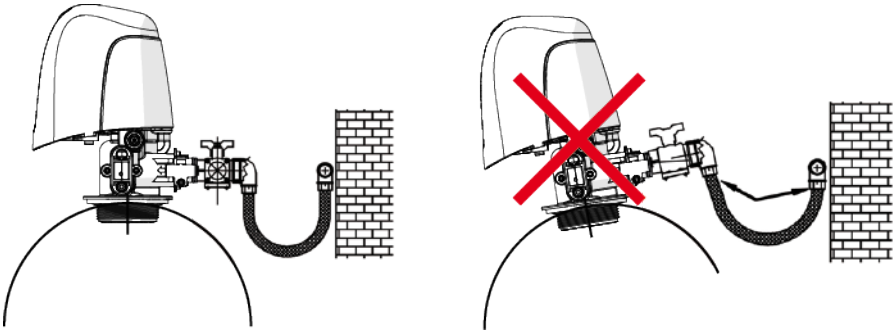

- in any case, any failure caused by improper installations and/or piping connections may void the warranty of Pentair products;
- in the same way, using lubricant* [→Page 43] on the valve thread is not allowed and will void the warranty for the valve and tank. Indeed using lubricant there will cause the valve to be over-torqued, which may lead to valve thread or tank thread damage even if the connection to piping has been done following the above procedure.

*Note: Use of petroleum-based grease and mineral based lubricant is totally forbidden, not only on the valve thread, since plastics used (especially Noryl) will highly suffer from contact with this type of grease, leading into structural damage hence to potential failures.

5.6 Block diagram and configuration example

Block diagram

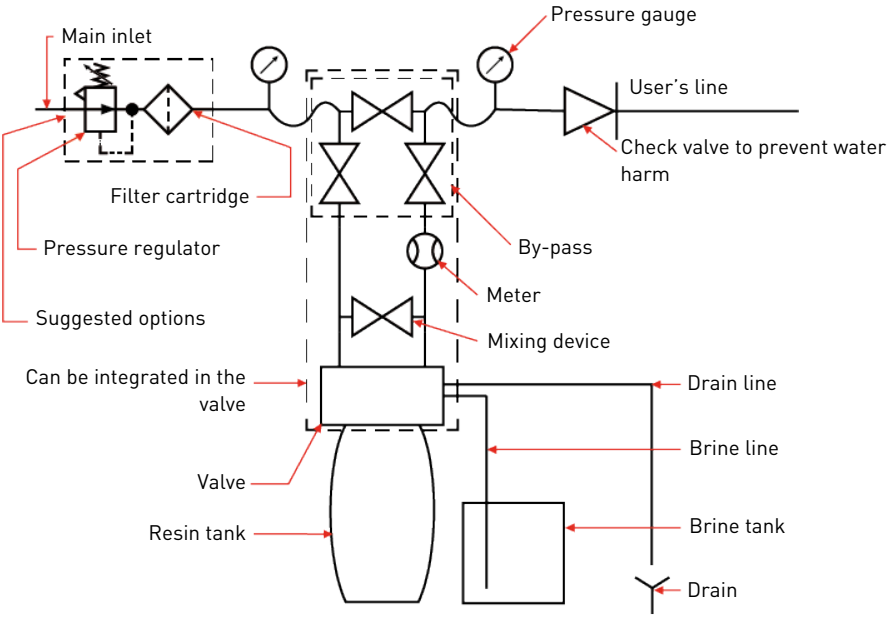

Top mounted configuration example

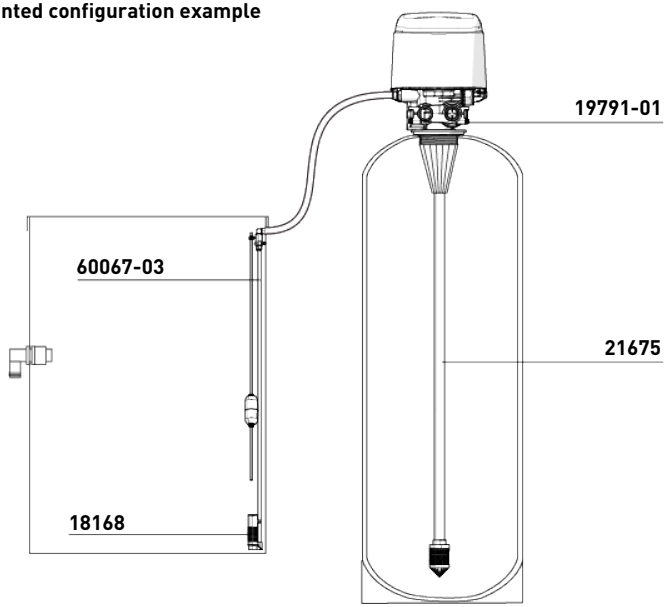

5.7 Regeneration flows

Softener Metered Immediate:

Measures water usage and regenerates the system as soon as the calculated system capacity is depleted. The control calculates the system capacity by dividing the unit capacity by the feed water hardness. Softener Immediate systems do not use a reserve volume. The controller will also start a regeneration cycle at the programmed regeneration time if a number of days equal to the day override pass before water usage depletes the calculated system capacity. The day override parameter default is **OFF**, and **REGEN TIME** will be greyed out unless the day override value has been modified.

Caution - material

Constant regeneration due to bad programming !

When setting the system for softener immediate regeneration, setting the capacity to a value lower than that of feed water hardness may cause the system to constantly regenerate. If this occurs, disconnect the motor from the controller and correct the capacity and feed water hardness values in master settings. See Settings screen [→Page 61] for more information.

Softener Metered delayed:

Measures water usage and regenerates the system at the selected regeneration time after the calculated system capacity is depleted. The control calculates the system capacity by dividing the unit capacity by the feed water hardness and subtracting the reserve.

The reserve should be set to ensure that the system delivers treated water between the time the system capacity is depleted and the actual regeneration time. Reserves can be set at a fixed volume, fixed percentage of capacity, a variable reserve based on the previous calendar day's water usage, or a weekly reserve based on the average water usage for the current day of the week. The default setting for the day override parameter is **OFF**, and the default reserve type is weekly reserve.

A softener delayed controller will also start a regeneration cycle at the selected regeneration time if a number of days equal to the day override pass before water usage depletes the calculated system capacity.

If the regeneration type is changed from softener immediate to softener delayed (or vice-versa), all parameters within those types will be reset to factory default.

Time clock:

Triggers a regeneration on a timed interval. The controller will initiate a regeneration cycle at the selected regeneration time when the number of days since the last regeneration equals the day override value. The day override can be set from 1 - 99 days as well as partial day intervals of 4, 8, 12, 16 and 20 hours.

5.8 Electrical connections

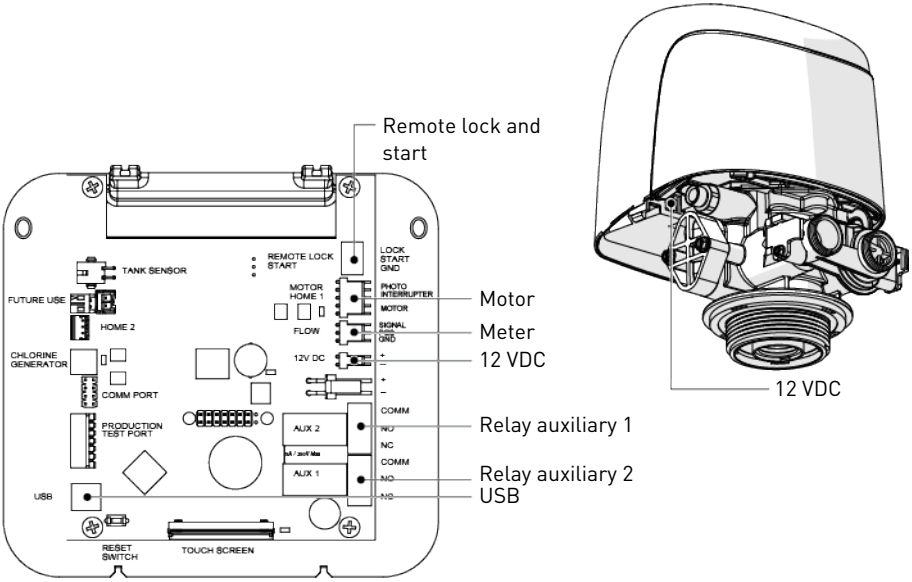

5.9 Bypassing

A bypass valve system should be installed on all water conditioning systems. Bypass valves isolate the softener from the water system and allow unconditioned water to be used. Service or routine maintenance procedures may also require that the system is bypassed.

Normal operation

Softening System

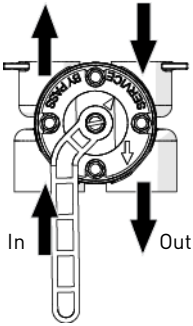

In Bypass

Softening System

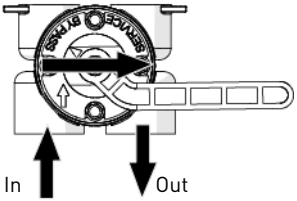

Caution - material

Risk of damage due to bad mounting !

Do not solder pipes with lead-based solder.

Do not use tools to tighten plastic fittings. Over time, stress may break the connections.

Do not use petroleum grease on gaskets when connecting bypass plumbing. Do not use silicon grease. Use only P-80® Emulsion lubricant (water based lubricant). Using another lubricant may damage the valve.

5.10 Drain line connection

Info

Standard commercial practices are expressed here.

Local codes may require changes to the following suggestions.

Check with local authorities before installing a system.

Mandatory

The drain line must be build with ½" semi rigid or rigid piping ! An air gap must be present at the drain!

Caution - material

Risk of damage due to over-force !

The drain line plastic elbow must always be hand-tighten without using the elbow as a lever.

The drain plastic elbow is not designed to support the weight of the tube. The tube has to have its own support.

Do not over tighten the hose tightening ring on its plastic support.

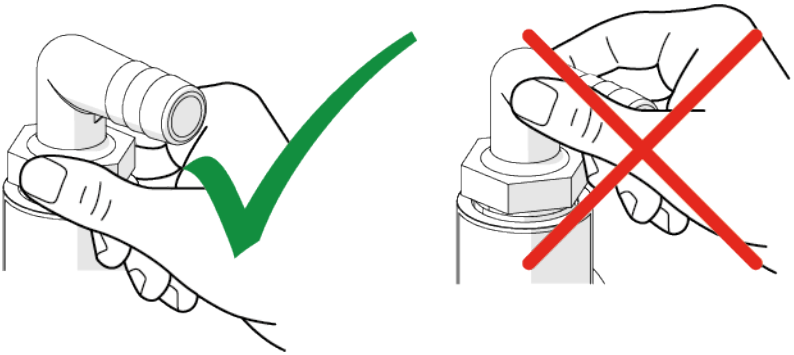

Preferably, the unit should not be more than 6.1 m from the drain. Use an appropriate adapter fitting to connect plastic tubing to the drain line connection of the valve.

If the backwash flow rate exceeds 58 lpm or if the unit is located 6.1-12.2 m from the drain, use 25.4 mm (1") tubing. Use appropriate fittings to connect the 25.4 mm (1") tubing to the 19.0 mm (¾") drain connection on the valve.

The drain line may be elevated up to 1.8 m providing the run does not exceed 4.6 m and water pressure at the softener is not less than 2.76 bar. Elevation can increase by 61 cm for each additional 0.69 bar of water pressure at the drain connector.

Where the drain line is elevated but empties into a drain below the level of the valve, form a 18 cm loop at the far end of the line so that the bottom of the loop is level with the drain line connection. This will provide an adequate siphon trap.

Where the drain empties into an overhead sewer line, a sink-type trap must be used.

Secure the end of the drain line to prevent it from moving.

Mandatory

Waste connections or the drain outlet shall be designed and constructed to provide connection to the sanitary waste system through an air-gap of 2 pipe diameters or 25.4 mm (1"), whichever is larger.

Caution - material

Risk of damage due to lack of gap !

Never insert the drain line directly into a drain, sewer line or trap. Always allow an air gap between the drain line and the waste water to prevent the possibility of sewage being back-siphoned into the softener.

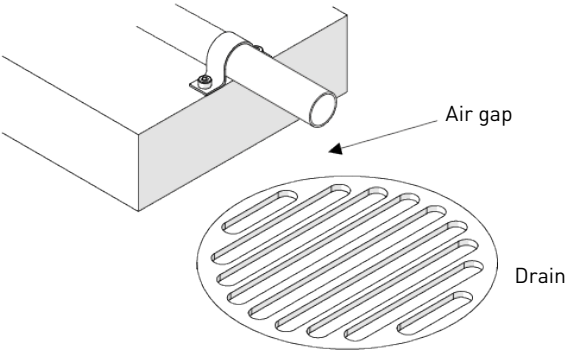

5.11 Overflow line connection

In the event of a malfunction, the brine tank overflow fitting will direct "overflow" to the drain instead of spilling on the floor. This fitting should be on the side of the brine tank. Most brine tank manufacturers feature a pre-drilled hole for the tank overflow connector.

To connect the overflow line, locate the hole on the side of the tank. Insert the overflow fitting into the tank and tighten with plastic thumb nut and gasket as shown below. Attach a 12.7 mm (½") I.D. tubing (not supplied) to fitting and run to drain.

Do not elevate overflow higher than overflow fitting.

Do not tie into the drain line of the controller unit. The overflow line must be a direct, separate line from overflow fitting to drain, sewer or tub. Allow an air gap as per drain line instructions.

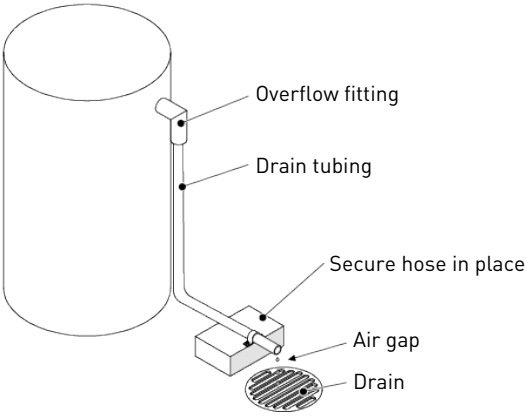

Caution - material

Risk of flooding due to lack of floor drain !

Floor drain is always recommended to avoid flooding in case of overflow.

5.12 Brine line connection

Mandatory

The brine line must be built with 3/8'' semi rigid piping !

Caution - material

Risk of malfunction due to the use of wrong equipment !

Flexible and semi-flexible hoses may shrink because of the vacuum during brine draw.

The brine line from the tank connects to the valve. Make the connections and hand tighten. Be sure that the brine line is secure and free from air leaks. Even a small leak may cause the brine line to drain out, and the softener will not draw brine from the tank. This may also introduce air into the valve, causing problems with the valve operation.

Brine line must be equipped with brine tank air check in the brine tank.

6 Programming

6.1 Home screen

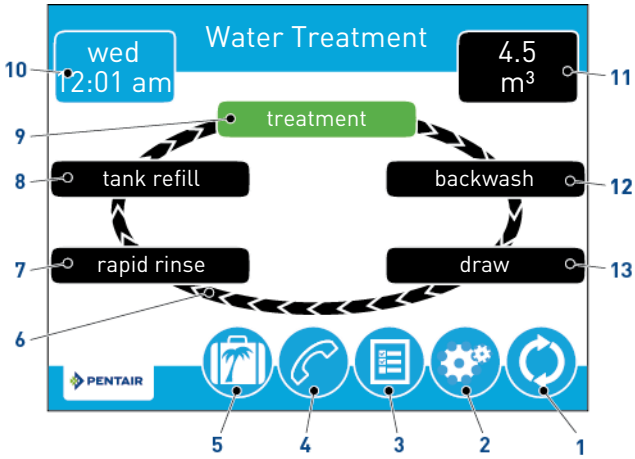

Info

If no button is pushed for five minutes, the screen will enter a power save mode. The unit will continue to operate, but the screen will be blank. Touch anywhere on the screen to exit power save mode.

Not all buttons appear on all screens.

1		Regeneration	• Displays the regeneration screen, which allows you to start a regeneration and manually cycle through the regeneration steps.
2		Settings	• Displays the settings screen, which allows you to adjust commonly used settings. Pressing this button while in the settings screen provides access to the master settings screen, which allows you to fully program the valve.
3		Diagnostics	• Displays the diagnostics screen, which can assist in performing maintenance and troubleshooting performance issues with the valve.
4		Assistance	• Displays a name and phone number to call for unit service.
5		Vacation	• Halts all scheduled regenerations when pressed; press again to resume normal operation.
6		Regeneration cycle wheel	• Displays the cycle steps the valve will step through during service and regeneration; the current cycle step is always shown on green.

Info

On metered units, the "Treatment" step on the regeneration cycle wheel will flash when water is flowing through the unit.

7	Rapid Rinse	• Water flows from the top of the vessel to the bottom of the vessel to rinse the media.
8	Tank Refill	• Brine tank is refilled with water.
9	Treatment	• The unit is treating water.
10	Day and time	• Displays the currently programmed day of the week and time. This button will flash at the start-up and if the supercapacitor is discharged
11	Next scheduled regeneration	• Displays the time to next scheduled regeneration, or volume remaining until regeneration in meter systems.
12	Backwash	• Water flows from the bottom of the vessel to the top of the vessel to clean and mix the media.
13	Draw	• Brine is drawn into the media and then slowly rinsed out.
14	Pause	• Valve comes back in service position to allow brine preparation after refill. Shown if variable refill/brining regeneration flow has been selected in master setting.
15	Custom	• Shown if custom regeneration flow has been selected in master setting.
16	Home	• Displays the home screen.
17	USB connect	• Allows you to connect the controller to a PC via a USB cable for field programming or download of diagnostic parameters via PC (Field Programmer application required).
18	Arrows	• Displayed in the upper-left and upper-right corners of the screen, these arrows allow you to navigate from one screen to another. • Allow you to change the values of certain settings when programming the controller.

Info

Settings on previous screen are not saved unless is pressed.

19	Alarm	• Displayed when an error has occurred; accompanied with an audible alarm. Press to silence the audible alarm.
20	Error	• Displayed when an error has occurred. Press to display the error screen for more detailed error information.

21		Error log	• Press to show error list with date and time.
22		Advance	• This arrow allows you to advance through cycle steps during a regeneration.
23		Reset	• Displayed in the diagnostics screen by pushing on totalizer and peak flow buttons to reset totalizer and peak flow data, and in master settings screen to reset parameters to factory or non-factory settings.
24		Non-factory settings	• Press to save all the configuration in a custom profile.
25		Brightness	• Displays the brightness screen, to adjust the backlight brightness of the controller screen.
26		Accept	• Press to save or accept changes in controller configuration.
27		Cancel	• Press to cancel configuration and exit to previous screen without saving.

6.2 Touchscreen controller quick start

Info

Press ⊗ on any quick start screen to reset the screen back to its default settings, excepted on the "Assistance interval" screen.

Steps Assistance name screen [→Page 57] and Assistance phone screen [→Page 57] are optional and are not required to start the system. All controller settings may be changed after the unit is in service.

If the screen is blank after plugging in the unit, touch the screen to turn the screen on.

6.2.1 Quick start setting reference chart

Info

The controller will discard any changes and exit master settings if any button is not pressed for five minutes.

Screen name	Parameters	Values	Notes
Format, Format	Language	English French German Italian Spanish Dutch Portuguese	Changes the language to display screen text and button labels.
	Units	U.S. Metric	Changes system units and values across all parameters in the control. All programmed units and values are recalculated after adjusting this setting.
	Hardness units	Grain per gallon mg/L or ppm German degrees French degrees Clark degrees	Changes hardness units used in displaying hardness parameters and calculating system capacity and editing exchange capacity and hardness settings.
Format, Assistance name	Free-form text	A - Z and space	Name of service provider to display when viewing the assistance screen. 24 character limit.
Format, Assistance phone	Free-form text	0 - 9 and space	Phone number of service provider to display when viewing the assistance screen. 14 character limit.

Screen name	Parameters	Values	Notes
Format, Assistance interval	Interval	Month based: 1 - 60 Regen based: 5 - 2000 OFF	Set to automatically display the assistance screen after a certain number of months or regenerations.
Day and time	Date and time	Time AM/PM/HR Day, Month, Year	Set time and date of the controller.
Settings	Day override	OFF - 1 – 99 days 4, 8, 12, 16 and 20 hours	Mandatory for timeclock systems. Available to be programmed for all regeneration types. 4 to 20 hours setting available only for the timeclock systems
	Time driven	12/24 hours clock	Required for time clock and delayed regeneration types. Set for immediate regeneration types only when a day override is also set. Not available for timeclock system if day override is set from 4 to 20 hours.
	Regeneration time	1 – 199 grains/gallon 1 – 1999 mg/litre x – x degrees	Only required on softener metered systems to calculate treated water capacity and reserve. Represents hardness of untreated water.

6.2.2 Format screen

After plugging in the unit for the first time, the format screen is displayed.

Info

Happens until Assistance Name is set.

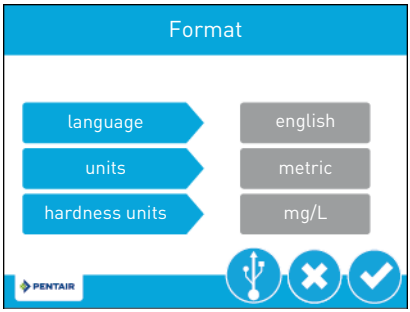

Press the **language** button and use the arrows to adjust the system's displayed language: English, French, German, Italian, Spanish, Dutch or Portuguese.

Press the **units** button and use the arrows to adjust the system's units of measure (either U.S. or metric).

Press the **hardness units** button and use the arrows to adjust the system's hardness units of measure (grains per gallon, mg/L or ppm, German degrees, French degrees, or Clark degrees). Hardness units are adjustable only if metric units are selected.

Press to validate the selection and move to the assistance name screen.

6.2.3 Assistance name screen

Using the keypad, type the name of the water treatment professional or company that the homeowner may call for system service (optional).

To enter a letter using the keypad, quickly press the keypad button the number of times that correspond with the position of the correct letter on the button. For example, to enter the letter "c", quickly press the **abc** button three times.

Press to validate the selection and move to the assistance phone screen.

6.2.4 Assistance phone screen

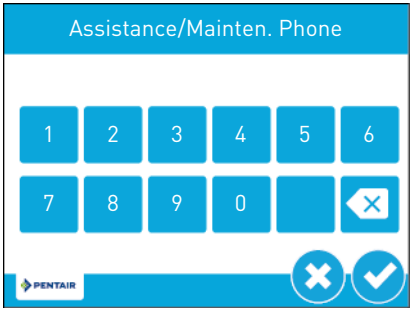

Enter the phone number of the water treatment professional or company that the homeowner may call for system service (optional).

Press to validate the selection and move to the assistance interval screen.

6.2.5 Assistance interval screen

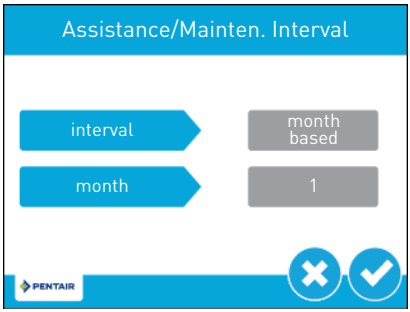

Use the assistance interval screen to set the interval in which the homeowner will need to call a water treatment professional or company for system service (optional). The assistance interval can be based on a set number of months (month based) or a number of regenerations (regen based).

Press the **interval** button and use the arrows to select a month-based or regen-based assistance interval. Press either the **month** or **regen.** button (depending on your previous selection), and use the arrows to select the number of months (up to 60) or regenerations (up to 2000) until the homeowner will need to call for service.

Press to validate the selection and move to the home screen.

6.2.6 Day and time screen

On the home screen, the flashing **Day and Time** button indicates that the day of the week and time need to be set. If the date and time are incorrect, press the **Day and Time** button to update to the correct day and time.

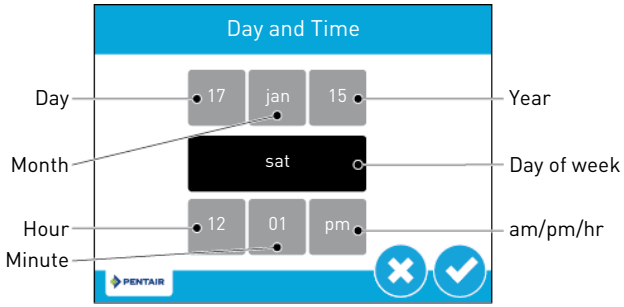

Press the **Hour, Minute**, and **am/pm/hr** buttons and use the arrows to adjust the values to the correct time. Setting the value of the **am/pm/hr** button to **hr** changes the display to a 24 hour clock.

Press the **Day**, **Month**, and **Year** buttons and use the arrows to adjust the values to the correct date. **Day of week** will be automatically set with the date.

Press to validate and to return to the home screen, or to exit without saving.

6.2.7 User assistance screen

The assistance screen displays the name and phone number that the homeowner may call for service of the unit.

From the master settings or home screens, press the assistance button to access the user assistance screen.

Info

If no assistance name and phone as been set, "for service or assistance: please contact your local water professional" will be displayed.

The Assistance screen is also displayed automatically when the system reaches the programmed assistance interval.

6.2.8 Settings screen

The settings screen allows you to change basic controller settings including time of regeneration and water hardness. These settings improve the operational efficiency of the system and can be adjusted independently from other controller settings without needing to enter master settings.

Info

Settings can not be accessed during a regeneration. If a regeneration has to start while in the settings menu, it will not start until exit the menu.

From the home screen, press the settings button to access the settings screen.

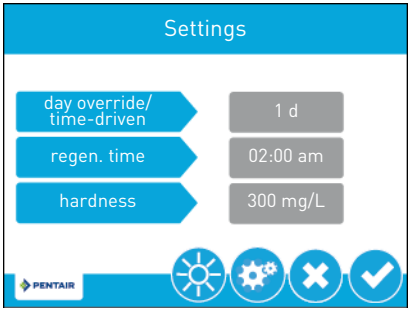

Press **day override/time-driven** and use the arrows to adjust the number of days since last regeneration in which a new regeneration will automatically be run whether one is scheduled or not.

Press **regen. time** and use the arrows to adjust the time of day when an automatic regeneration cycle will begin.

Press **hardness** and use the arrows to adjust the hardness setting. This value should match the hardness of the incoming untreated water supply.

Info

If immediate volumetric regeneration has been set, regeneration time will have no influence on it and regeneration will start as soon as capacity end.

Changing the hardness setting recalculates treatment volume and regeneration interval. This setting should only be changed on the advice of a professional.

The hardness parameter is not accessible in timeclock and filter mode.

Press to save your changes or press to return to the home screen without saving.

Additional features

Additional features may be accessed from the Settings screen by pressing the buttons at the bottom of the screen:

Master settings

- Displays the master settings screen, which allows you to fully program the valve.

Brightness:

- Displays the brightness screen, which allows you to adjust the backlight brightness of the controller screen.

6.3 Master setting programming

Info

If a regeneration is scheduled to occur while in master settings, the scheduled regeneration will start as soon as exiting the master setting.

Due to the complexity of these settings and the potential for errors, master settings should only be accessed by your local water professional.

Caution - material

Incorrect system operating due to improper master settings adjusting !

Before entering master settings please contact your professional water dealer.

The following is a detailed overview of settings available in Master Settings. Please see Master setting reference chart [→Page 64] for the complete set of values and ranges available to program while in master settings.

6.3.1 Master setting screens

The master settings screens include all configurable parameters available in the controller.

From the settings screen, press the settings button . A warning message appears:

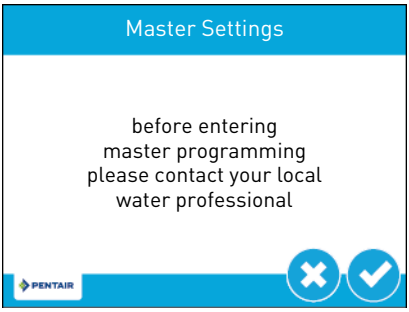

Press to continue to the password screen or press to return to the home screen.

The Password screen displays a numeric keypad:

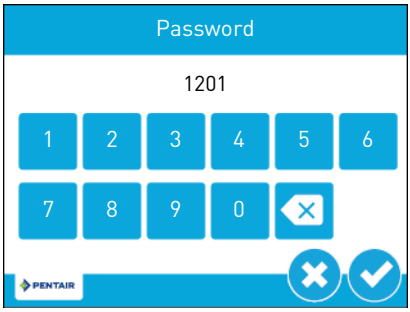

Enter the master settings password **1201** and press to continue to the master settings screen, or press to return to the home screen.

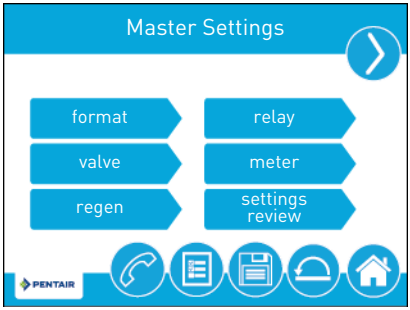

While in the master settings screens, press to save all set parameters to a custom profile (see Non-factory setting [→Page 84]) or press the home button to return to the home screen.

Features of the master settings screens are described below. See Master setting programming [→Page 62] and Master setting reference chart [→Page 64] for more detailed information.

format: Contains settings for Language, Units, Assistance Name, Assistance Phone, and Assistance Interval. See **Touchscreen controller quick start [→Page 54]** for more information about these settings.

Info

Differently from what happens if the menu is acceded from the quick start, when acceded from master setting, push to exit the menu without saving the modifications.

valve: Contains settings for system, valve, and regeneration type. Plus, depending of the settings, media volume, salt dosage, BLFC size, capacity, hardness, day override, reserve, volume override and regeneration time.

regen: Contains settings for regeneration flow and cycles duration.

relay: Contains settings for Aux 1 and Aux 2 relays.

meter: Contains settings for meter types.

settings review: Displays a summary of all programmed settings.

Press the screen navigation arrow at the top right of the screen to navigate to the secondary master settings screen.

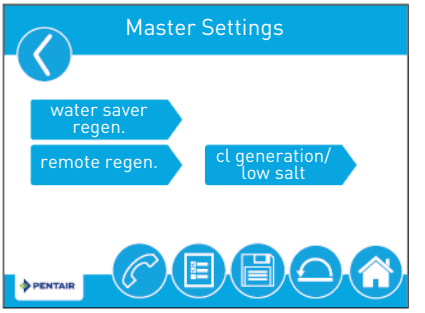

water saver regen.: Set a low water usage regeneration.

remote regen.: Contains settings for triggering a regeneration via a remote input.

cl generation/low salt: Contains settings for chlorine generation and salt alarm.

6.3.2 Master setting reference chart

Info

Some items may not be shown depending on controller configuration.

The controller will discard any changes and exit master settings if any button is not pressed for five minutes.

Screen name	Parameters	Values	Notes
Format, Format	Language	English French German Italian Spanish Dutch Portuguese	Changes the language to display screen text and button labels.
	Units	U.S. Metric	Changes system units and values across all parameters in the control. All programmed units and values are recalculated after adjusting this setting.
	Hardness units	Grain per gallon mg/L or ppm German degrees French degrees Clark degrees	Changes hardness units used in displaying hardness parameters and calculating system capacity and editing exchange capacity and hardness settings.

Screen name	Parameters	Values	Notes
Format, Assistance name	Free-form text	A - Z and space	Name of service provider to display when viewing the assistance screen. 24 character limit.
Format, Assistance phone	Free-form text	0 - 9 and space	Phone number of service provider to display when viewing the assistance screen. 14 character limit.
Format, Assistance interval	Interval	Month based: 1 - 60 Regen based: 5 - 2000 OFF	Set to automatically display the assistance screen after a certain number of months or regenerations.
Valve	System	4	Type 4 (single system) is currently the only available selection.
	Valve	5800 5810 5812	Select the type of valve to be installed.
	Regen type	Time clock Softener immediate Softener delayed Filter immediate Filter delayed	Regeneration types are described in detail on Regeneration flows [→Page 45]. Additional Valve screen parameters are dependent upon selected regeneration type. Not all parameters will be displayed. Softener delayed regeneration type has four reserve options (fixed %, fixed volume, variable reserve, weekly reserve). The control will display additional configuration options depending on the selected reserve type.
	Media volume	0.25 to 999 ft^3 1 to 9999 litres	Only required on softener metered regeneration types.
	Salt dosage	3 to 18 lbs/ft^3 50 to 290 g/litre	
	BLFC size	0.125 gpm 0.250 gpm 0.500 gpm 1.000 gpm	

Screen name	Parameters	Values	Notes
Valve	Capacity	1 to 999 999 grams 1 to 9 999 999 grains/ degrees * Litre	Only required on softener metered systems to calculate treated water capacity and reserve. Represents total system capacity between regenerations.
	Hardness	1 – 199 grains/gallon 1 – 1999 mg/litre x - x degrees	Only required on softener metered systems to calculate treated water capacity and reserve. Represents hardness of untreated water.
	Sensor sensitivity	Not active	Not active
	Day override Time driven	OFF - 1 – 99 days 4, 8, 12, 16 and 20 hours	Mandatory for timeclock systems. Available to be programmed for all regeneration types. 4 to 20 hours setting available only for the timeclock systems
	Regeneration time	12/24 hours clock	Required for time clock and delayed regeneration types. Set for immediate regeneration types only when a day override is also set. Not available for timeclock system if day override is set from 4 to 20 hours.
	Reserve	Fixed % Fixed volume Weekly reserve Variable reserve	Only available when softener meter delayed regeneration type is selected. Selecting fixed % or fixed volume will display additional configuration options. Weekly reserve is calculated based on average day of week's water usage. Variable reserve is calculated based on previous day's water usage.
	Volume override	1 to 999 999 999 gallons/litres	Only displayed when regeneration type is filter immediate or filter delayed.

Screen name	Parameters	Values	Notes
Regeneration	Regeneration flow	Downflow Downflow 2x BW Upflow Custom downflow Custom upflow Variable refill Filter Custom filter	Cycle steps on the home screen and during regeneration will change to reflect the cycle steps and order in the selected regeneration flow. Additional regeneration screen parameters are dependent upon selected regeneration flow. Not all parameters will be displayed, depending of the selected regeneration flow. Custom upflow, downflow and filter allows for up to 20 programmable cycle steps. Variable refill calculates refill time based on salt dosage, media volume, and BLFC Size, and it is not possible to change it. Time per cycle step can be programmed for all other regenerant flow options.
Relay output	Aux.1/Aux.2	Alarm based Cycle based Time based Volume based Off	For cycle based relays, select the cycle steps on which the relays will turn on. For time based relays, two start/end times can be selected for each relay. Relay times are based on total regeneration cycle time. Volume based relays can be programmed from one gallons/litres to the full system volume capacity. Duration can be set from one second to two hours. Volume based option is not available when regeneration type is set to time clock. Alarm based relays will turn on when an alarm condition is met, and will turn off when the alarm is cleared.

Screen name	Parameters	Values	Notes
Meter	Meter type	0.75" paddle 0.75" turbine 1.00" paddle 1.25" turbine 1.50" paddle 1.50" turbine 2.00" paddle 3.00" paddle Generic	Only available when meter regeneration type is selected. Select the type of meter installed with the system. A generic option is available if the installed meter does not match any other selection. Selecting the generic meter type requires setting the number of pulses per gallon or litre to ensure proper metering.
	Generic	0,1 - 999.9 pulses per gallon 1 – 1500 pulses per litre	Only available when generic meter type is selected.
	Continuous flow detect	ON OFF	If set ON, gives an alarm if continuous flow is detected at the outlet.
Setting review	Displays a summary of all programmed settings.		
Water Saver Regen	Water saver regen.	OFF	-
Remote regeneration	Remote signal duration	1 – 255 seconds OFF	Set the timing for contact closure in seconds in order to trigger the regeneration.

Screen name	Parameters	Values	Notes
Cl generation Low salt	Cl generation / Low salt	OFF ON Low salt detect.	This parameter will not be available for filter regeneration types. On the valves of series 5800, cl generation/ low salt must be set OFF because the chlorine cell kit managed by the XTR is not available for those valves. If set ON, chlorine generation together with low salt detection will be performed during brine draw cycle. If set "Low salt detec.", only low salt detection will be performed during brine cycle.
	Regen interval	1 - 255 Regeneration	Only available when cl generation/low salt is set ON. This parameter determines the regeneration frequency on which there will be chlorine generation. Low salt detection will be performed during regenerations indifferently of the frequency set for cl generation. Salt alarm will not avoid scheduled regenerations to be performed.

6.3.3 Format screen

From the master settings screen press the **format** button to display the format screen.

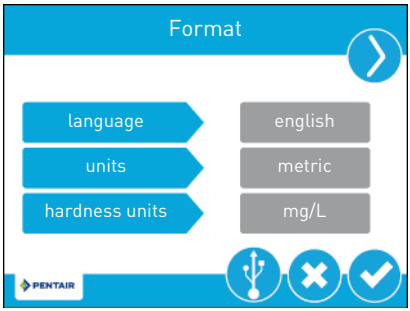

language: Displays the language used on the controller: English, French, German, Italian, Spanish, Dutch or Portuguese.

units: Contains settings for the unit type (either US or Metric) to be used in the controller.

hardness units: Contains settings for hardness units of measure (grains per gallon, mg/L or ppm, German degrees, French degrees, or Clark degrees).

Info

Hardness units are adjustable only if metric units are selected.

Degree hardness units are converted to ppm upon input. Degree inputs may be rounded up or down to the nearest ppm equivalent.

Press the screen navigation arrows at the upper-right and left of the screen to navigate to the assistance name, assistance phone, and assistance interval screens. See Touchscreen controller quick start [→Page 54] for more information about these settings.

Press to save changes or press to return to the master setting screen without saving.

6.3.4 USB connection for field programming

The XTR features a USB port that allows you to connect a PC to the controller for field programming and diagnostic parameter download.

Info

Field programmer software is required for field programming features. See XTR field programmer manual for more information on using the field programmer software.

Do not remove USB cable from computer or controller while connected and transferring.

From the format screen, press to access the **USB** screen.

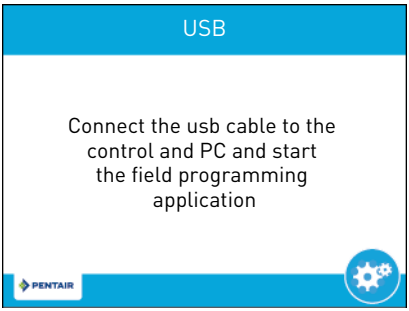

When the USB screen appears, connect a USB cable to the USB port on the controller circuit board (see Electrical connections [→Page 46]Electrical connections [→Page 46] for location of USB port). Connect the other end of the USB cable to a PC with the field programmer software installed and follow the directions in the XTR field programmer manual to complete the connection.

Press to return to master settings.

6.3.5 Valve screen

From the main master settings screen press the **valve** button to display the valve screen.

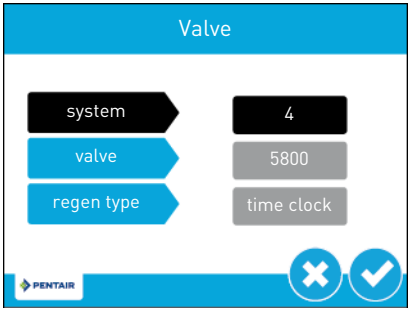

system: Displays the system type. Type 4 (single system) is currently the only available selection.

valve: Contains settings to select the valve model on which the controller is installed.

regen type: Define the regeneration type (time clock, softener metered immediate, softener metered delayed, filter metered immediate, filter metered delayed, tank sensors).

Info

Depending of the regeneration type selected, following parameters to be set will change.

Adjusting regeneration type may turn set relays OFF depending of the regeneration type adjust and of the relay set. Any required relays will need to be reprogrammed in the relay output screen.

Press to save and pass to the next screen or press to return to the master settings screen without saving.

6.3.5.1 Time clock

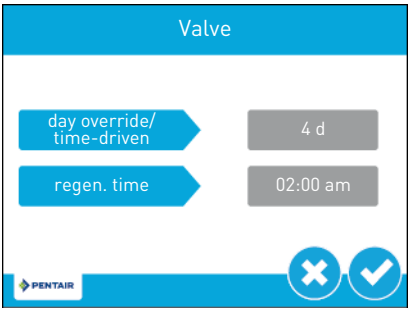

day override/time-driven: Adjust the number of days between regenerations.

regen. time: Adjust the regeneration time.

Press to save or press to return to the master settings screen without saving.

6.3.5.2 Softener metered immediate

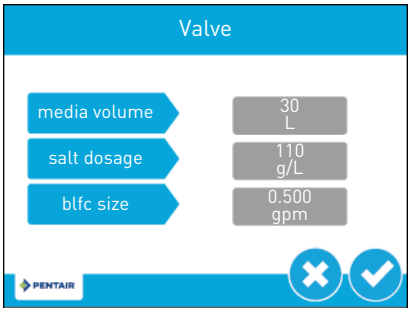

media volume: Adjust the volume of resin.

salt dosage: Adjust the salt dosage.

blfc size: Adjust the BLFC size.

Press to save and pass to the next screen or press to return to the master settings screen without saving.

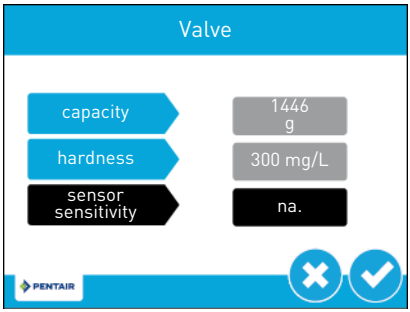

capacity: Adjust the system capacity.

hardness: Adjust the inlet water hardness.

sensor sensitivity: Option not available.

Press to save and pass to the next screen or press to return to the master settings screen without saving.

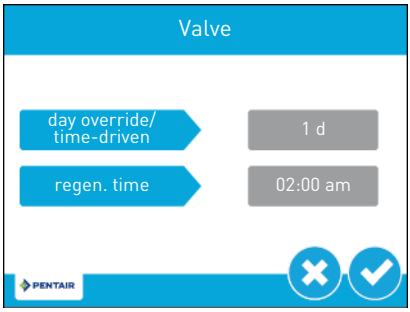

day override/time-driven: Adjust the day override.

regen. time: Adjust the regeneration time.

Press to save and return to the master settings screen or press to return to the master settings screen without saving.

6.3.5.3 Softener metered delayed

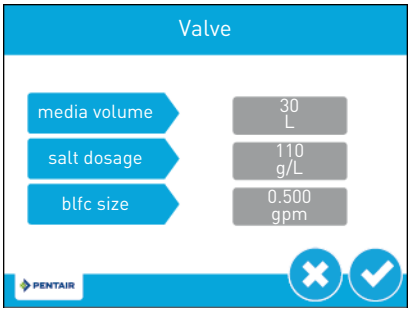

media volume: Adjust the volume of resin.

salt dosage: Adjust the salt dosage.

blfc size: Adjust the BLFC size

Press to save and pass to the next screen or press to return to the master settings screen without saving.

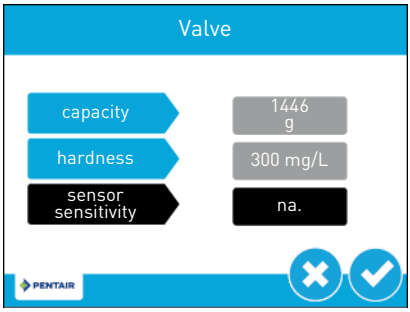

capacity: Adjust the system capacity.

hardness: Adjust the inlet water hardness.

sensor sensitivity: Option not available.

Press to save and pass to the next screen or press to return to the master settings screen without saving.

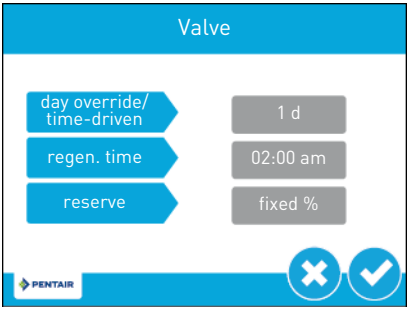

day override/time-driven: Adjust the day override.

regen. time: Adjust the regeneration time.

reserve: Contains settings for the type of reserves: fixed %, fixed volume, weekly and variable.

Press to save and return to the master settings screen or press to return to the master settings screen without saving.

Info

If reserve is set at fixed % or fixed volume, by pressing a reserve setting screen will appear.

If fixed % reserve has been selected:

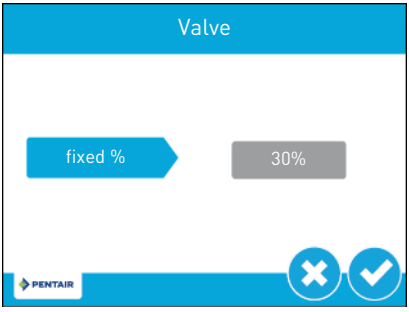

fixed %: Adjust the reserve %.

Press to save and return to the master settings screen or press to return to the master settings screen without saving.

If fixed volume reserve has been selected:

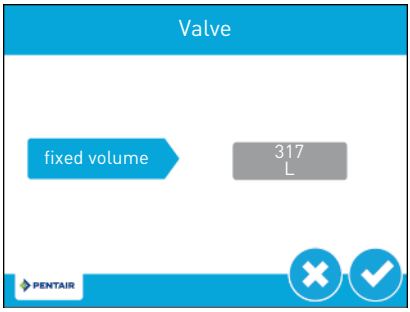

fixed volume: Adjust the reserve volume.

Press to save and return to the master settings screen or press to return to the master settings screen without saving.

6.3.5.4 Filter metered immediate or delayed

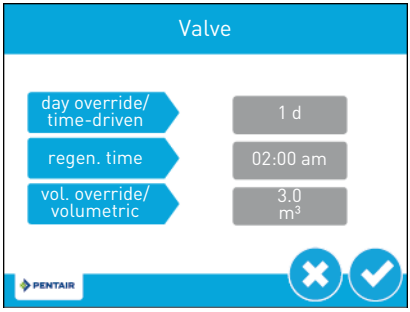

day override/time-driven: Adjust the day override.

regen. time: Adjust the regeneration time.

vol. override/volumetric: Adjust the volume of water treated between regenerations.

Press to save and return to master settings screen or press to return to the master settings screen without saving.

6.3.6 Regeneration screen

From the master settings screen press the **regen.** button to display the regeneration screen.

Info

Adjusting regeneration settings may turn set relays OFF depending of the regeneration settings adjust and of the relay set. Any required relays will need to be reprogrammed in the relay output screen.

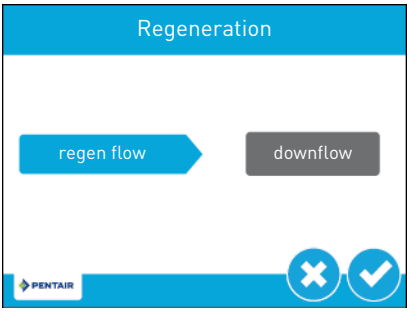

regen flow: Contains settings for the type of regenerant flow to be used in the valve. Changes to this setting affects the cycle steps displayed in the regeneration cycle wheel on the home screen. Regenerant flow cycle steps are described below. See **Home screen [→Page 51]** for cycle step definitions.

upflow: Cycle steps are as follows: draw, backwash, rapid rinse, tank refill.

downflow: Cycle steps are as follows: backwash, draw, rapid rinse, tank refill.

downflow 2x backwash: Cycle steps are as follows: backwash, draw, backwash, rapid rinse, tank refill.

filter: Cycle steps are as follows: backwash, rapid rinse.

Info

This option appears only if regeneration type is set to time clock or filter metered delayed or immediate.

custom upflow/downflow/filter: Allows for up to 20 programmable cycle steps.

Info

Custom filter appears only if regeneration type is set to time clock or filter metered delayed or immediate.

variable refill/brining: Cycle steps are as follows: tank refill, pause, draw, backwash, rapid rinse. Variable refill / brining calculates refill time based on salt dosage, media volume, and BLFC size.

Info

This option appears only if regeneration is set to metered delayed.

If regeneration type is set to filter meter delayed or immediate, the only options for regeneration flow are filter and custom filter.

Press ✔ to save and pass to the next screen or press ✖ to return to the master settings screen without saving.

When changing the regeneration flow, warning messages may appear depending of the change done:

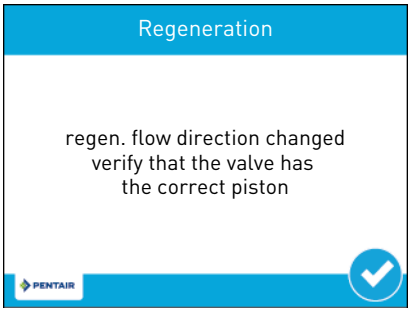

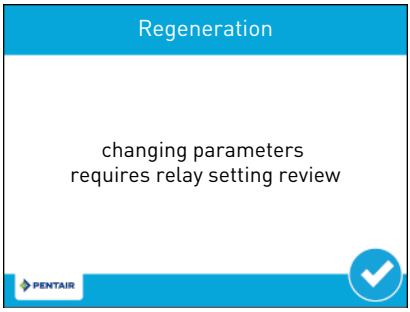

6.3.6.1 Upflow, downflow, downflow 2x backwash, filter, variable refill/brining

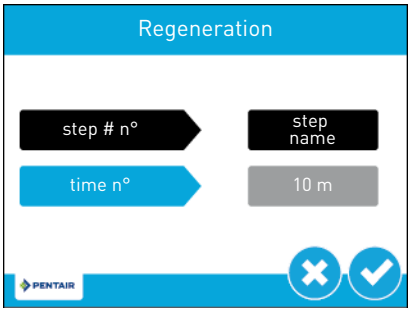

step # n°: Step type (pause, backwash, draw, rapid rinse, tank refill).

time n°: Adjust the step timing.

Press to save and pass to the next step or press to return to the regeneration screen without saving.

6.3.6.2 Custom downflow, custom upflow, custom filter

The controller will ask for a settings change or a new settings.

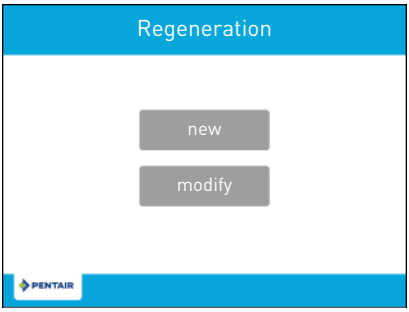

By pressing **new**, the controller let define all regeneration steps.

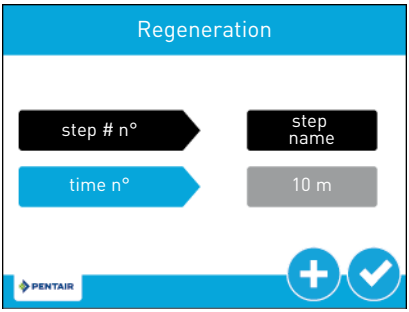

step # n°: Step type (pause, backwash, draw, rapid rinse, tank refill).

Info

If custom filter has been selected, only available steps will be: pause, rapid rinse and backwash.

time n°: Adjust the step timing.

Press to save and pass to the next step or press to valid the last step and return to the master settings screen.

Pressing **modify** you can change the settings in the steps that are already part of the custom regeneration cycle (type and timing).

Press to save and pass to the next step or press to return to the regeneration screen without saving.

6.3.7 Relay output screen

From the master settings screen press the **relay** button to display the relay output screen.

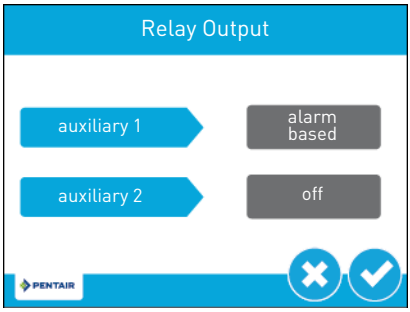

auxiliary 1/auxiliary 2: Contains settings for programming up to two auxiliary relay outputs. There are four types of signals that can be programmed:

alarm based: The relay will turn on when the specified alarm condition (or any alarm condition) is met. The relay will turn off when the alarm is cleared.

cycle based: The relay will turn on when the valve moves to the specified regeneration cycle steps. To program, select each cycle step button for which the relay should turn on.

time based: The relay will turn on and off at up to two specified start and end times.

volume based: The relay will turn on when the valve has treated a specified volume of water. Duration can be set for up to two hours.

Info

This option will not be available if regeneration type is set to timeclock.

Press to save and pass to the relay settings or press to return to the master settings screen without saving.

6.3.7.1 Alarm Based

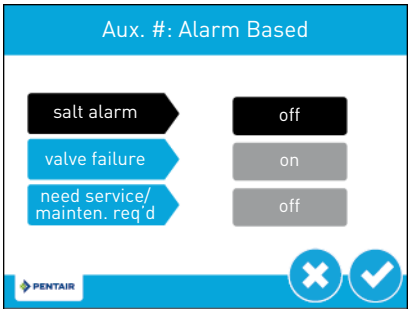

salt alarm: Turns the relay ON in case of salt alarm.

Mandatory

On the valves of series 5800, salt alarm must be set OFF because the chlorine cell kit managed by the XTR is not available for those valves.

valve failure: Turns the relay ON if the valve has a failure.

need service/mainten. req'd: Turns the relay ON when the interval between services is reached.

Press to save and to pass to the second relay settings screen if present, or press to return to the master settings screen without saving.

If already in second relay, or if second relay has not been activated, press to save and to return to the master settings screen or press to return to the master settings screen without saving.

6.3.7.2 Cycle Based

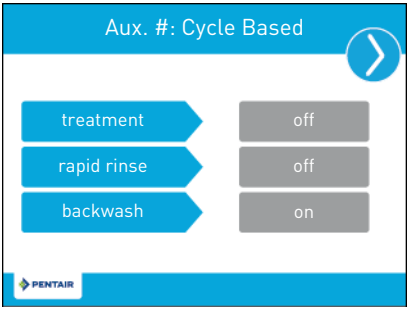

treatment: Turns the relay ON when the valve is on water treatment.

rapid rinse: Turns the relay ON when the valve is on rapid rinse cycle.

backwash: Turns the relay ON when the valve is on backwash cycle.

Press and to switch screens.

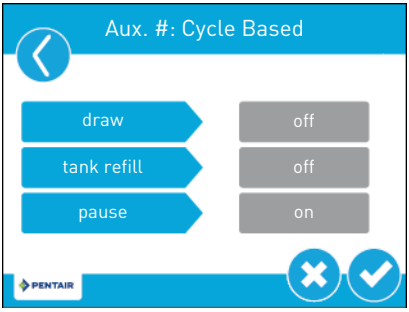

draw: Turns the relay ON when the valve is on draw cycle.

tank refill: Turns the relay ON when the valve is on tank refill cycle.

pause: Can be set with customs and variable refill/brining regeneration flows. Turns the relay ON when the valve is on pause.

Press to save and to pass to the second relay settings screen if present, or press to return to the master settings screen without saving.

If already in second relay, or if second relay has not been activated, press to save and to return to the master settings screen or press to return to the master settings screen without saving.

6.3.7.3 Time Based

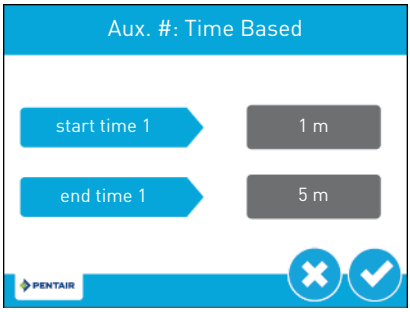

start time #: Time the relay will turn ON from the start of a regeneration cycle.

end time #: Time the relay will turn OFF from the start of a regeneration cycle.

Press to save and to pass to the second time settings screen or to the master settings screen.

Press to return to the master settings screen without saving.

Set the second times and press to save and to pass to the second relay settings screen if present, or press to return to the master settings screen without saving.

If already in second relay, or if second relay has not been activated, press to save and to return to the master settings screen or press to return to the master settings screen without saving.

6.3.7.4 Volume Based

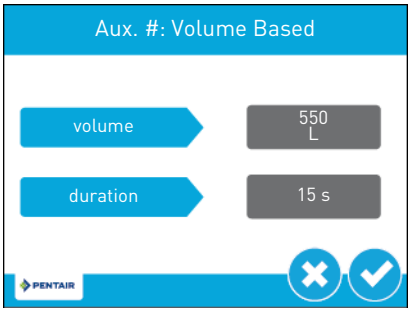

volume: Volume to be treated to turn the relay ON.

duration: Duration the relay will stay ON. Can be set for up to two hours.

Press to save and to pass to the second relay settings screen if present, or press to return to the master settings screen without saving.

If already in second relay, or if second relay has not been activated, press to save and to return to the master settings screen or press to return to the master settings screen without saving.

6.3.8 Meter screen

From the master settings screen press the **meter** button to display the meter screen.

Info

Not available with the timeclock regeneration type.

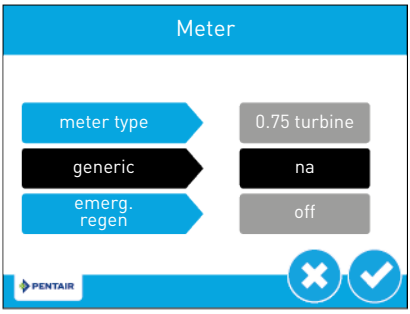

meter type: Contains settings for the type of meter installed with the system. The standard setting are:

- 0.75" Turbine for 5800;
- 1.25" Turbine for 5810 and 5812.

generic: If meter type is set to generic, permit to set up the number of pulses per litre.

continuous flow detect: When active, triggers an alarm when continuous flow of 0.5 gpm or 1 Lpm is detected by the flow meter over a 8 hours period.

Press to save and to return to the master settings screen or press to return to the master settings screen without saving.

6.3.9 Settings review

From the master settings screen press the **settings review** button to display the settings review screen, which display a read-only summary of all programmed settings in the controller.

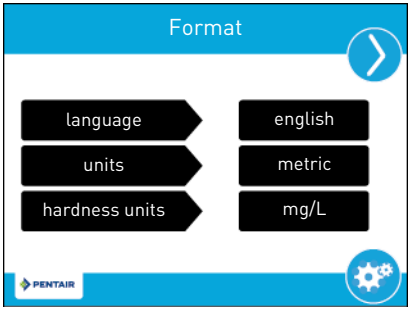

Use the navigation arrows at the top of the screen to scroll through the parameters currently set in the controller. The settings review screens are formatted similarly to the corresponding screen where each parameter was set.

Press to return to master settings.

6.3.10 Water Saver Regen screen

From the secondary master settings screen press the **water saver regen.** button to display the water saver regen. screen.

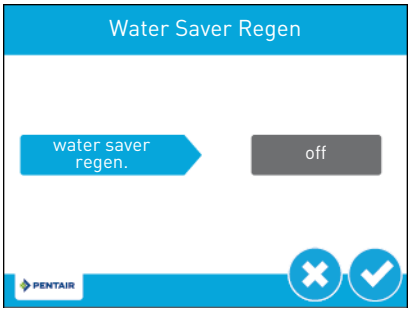

water saver regen.: Set to off. When activated, the backwash duration is reduced by 50% and the fat rinse duration is reduced by 66%, classic regeneration happening still at the programmed regeneration frequency (1-25 regenerations).

Press to save and to return to the master settings screen or press to return to the master settings screen without saving.

6.3.11 Remote Regeneration screen

From the secondary master settings screen press the **remote regen** button to display the remote regeneration screen.

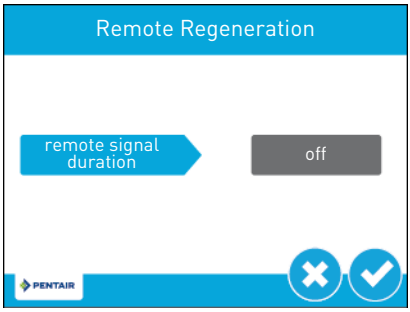

remote signal duration: Contains settings for triggering a regeneration via a remote input. Set a timing in seconds for contact closure in order to trigger the regeneration.

Connect a remote switch (such as a differential pressure switch) to the remote start input terminals on the back of the XTR controller board. See Electrical connections [→Page 46]. When the remote switch remains closed for the number of seconds specified in the remote regeneration screen, a regeneration will be triggered regardless of volume, capacity, or time remaining until the next scheduled regeneration.

Press to save and to return to the master settings screen or press to return to the master settings screen without saving.

6.3.12 Chlorine generation screen

From the secondary master settings screen press the **cl generation/low salt** button to display the chlorine generation screen.

Info

Cl generation/low salt will not be available for filter metered, immediate or delayed regeneration type.

Mandatory

On the valves of series 5800, cl generation/low salt must be set OFF because the chlorine cell kit managed by the XTR is not available for those valves.

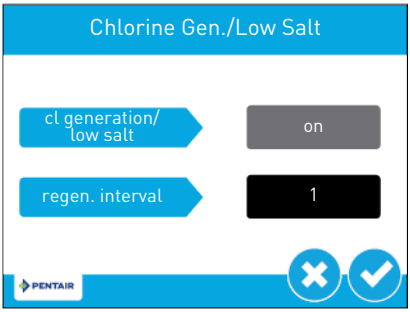

cl generation/low salt: Contains settings for the chlorine generation. Select between OFF, low salt detect. and ON.

regen. interval: Contains the setting for the chlorine generation interval. Set up from 1 to 255 to define the interval of regeneration between each chlorination activation, e.g. 1 so that it is enabled at every regeneration or 10 so that it is activated every 10 regenerations for instance.

Press to save and to return to the master settings screen or press to return to the master settings screen without saving.

6.3.13 Non-factory setting

After all parameters in master setting have been set, press on the master settings screen to display the non-factory settings screen.

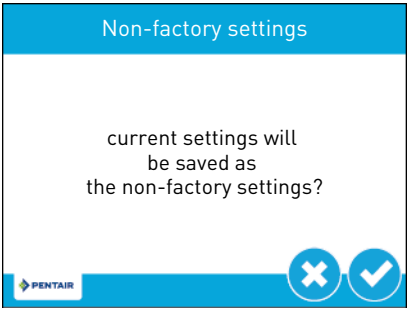

Press to save all programmed master settings parameters to non-factory settings. At any point, the controller can be reset to these saved custom settings (see Error log [→Page 86]). Press to return to the master settings screen without saving.

Info

By performing a custom reset, any setting that is subsequently programmed without saving to non-factory settings will be reset to the previously saved non-factory settings in the controller.

6.4 Diagnostics

The controller records and displays a variety of diagnostic data to assist with troubleshooting performance issues and fine-tuning system efficiency.

From the master settings or home screens, press the diagnostics button to access the diagnostics screen.

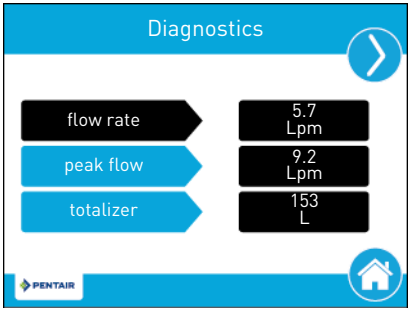

Press the screen navigation arrows at the upper-right and left of the screen to view each diagnostic parameter.

Press the home button to return to the home screen.

Info

If a regeneration is scheduled to occur while in the Diagnostic screen, the scheduled regeneration will start as soon as exit the diagnostic.

Only Peak Flow and Totalizer can be changed, they can be reset to zero by entering the parameter and then pressing .

Totalizer has a maximum value of 99 999 999. If this number is reached, the totalizer must be reset to zero to continue tracking this value.

Parameter	Description
Flow rate	Displays the current flow rate.
Peak flow	Displays maximum flow rate of water since last reset. By entering the parameter, date and time of occurrence will be displayed.
Totalizer	Displays total volume of water used since last reset.
Last Regen	Displays time occurred after last regeneration.

Parameter	Description
Reserve (only available for softener meter delayed regeneration type)	Displays the reserve volume based on the reserve type selected under master settings.
Software Version	Displays the software version installed on the controller.
No. of Regens	Displays how many manually and system initiated regenerations the system has gone through since last reset.
Regen. Interval	Displays the average length of time between regenerations based on the past four regenerations.
Daily Usage	Displays average water usage for each day of the week based on the usage on that day for the past six weeks. Enter the parameter to display average water daily usage. Select each day to display daily consumption for each day of the past six weeks together with dates. Use the arrows and to come back to diagnostics screen.
Usage Since Regen.	Displays water usage since last regeneration.
Last Settings Change	Displays the time occurred after the last update to master settings.
Seal Life	Not available.

6.4.1 Error log

Error log screen shows the list of logging attempts with date and time. From the diagnostics screen press to display the error log screen.

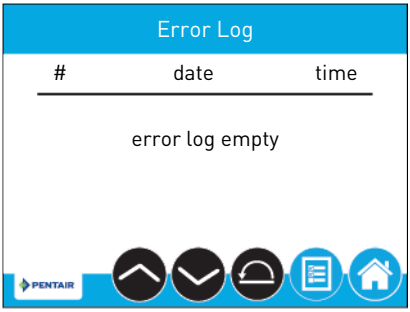

To clear all error logs, press to activate the button, press again to clear the list. Then enter **1201** at the password prompt screen and press to validate.

6.5 Resetting the controller

From the master settings screen press to display the reset screen.

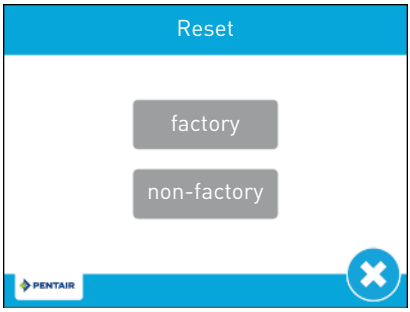

Press the **factory** button to reset all controller parameters to their factory defaults, or press the **non-factory** button to reset controller parameters to previously saved custom settings (see **Non-factory setting [→Page 84]**).

A warning screen appears before parameters are reset. Press ✔ to confirm the reset or press ✖ to return to master settings.

7 Commissioning

Info

This chapter is available for standard regeneration flows. Contact your supplier if the actual regeneration is not standard and if you need assistance.

7.1 Water filling, draining and waterproofness inspection

1. With the bypass still in bypass position (inlet and outlet of the valve closed), plug in the XTR controller to the power source.
2. Proceed to programming according to your system specification if not done yet.
3. Start a manual regeneration by pressing the regen button for 5 seconds. The piston will move into backwash position. If the first cycle is not backwash, quick cycle the valve until the piston is in backwash position. Once in this position, unplug the XTR controller from the power source.
4. With the bypass still in bypass position, open the nearest faucet close to the system.
5. Put the bypass slowly in service position. The valve and tank will slowly get filled with raw water, allowing air to be purged by the drain and/or by the open faucet next to the system. Open the inlet progressively until fully open position.
6. Once the drain runs clear and the bypass valve is fully in service position, plug in again the XTR controller to the power source.
7. Push on the regen button once to move the piston to the next regeneration cycle position. Leave the valve 1 minute in each positions and move to the next one, until refill cycle is displayed. When refill cycle is displayed, let the valve run the entire cycle and check the level of water in the brine tank or cabinet. The level of water in the brine tank should be about 5 cm above the salt platform. You may want to mark the level on the brine tank as this can be used as an indicator for the future lifetime of the softener.
8. Once refill cycle is completed, the valve will automatically go back into service position (unless non-standard regen sequence is programmed). Start again a manual regeneration by pressing for 5 seconds on the regen button. The valve will move to backwash position.
9. Press the regen button once to move to brine draw position. Check to see in the brine tank if the water level decreases.
10. Once the draw function is observed and confirmed (level of water in the brine tank or cabinet has decreased), you may go through each cycle pushing on the regen button until refill cycle, leave the water come back to the "full" level, and then push on the regen button so that the valve returns into service position.
11. Fill the brine tank or cabinet with salt. You may want to mark the level of water in the brine tank/cabinet when completely refilled with water and full of salt. In the future, after each regeneration, you can visually control that the quantity of water refilled should be between the 2 marks done. Marking are optional, but may allow to visually detecting any irregularity during regeneration that may lead to softener inefficiency.
12. With the brine tank completely refilled and full of salt, adjust the safety brine valve in the brine well. Make sure the overflow elbow is installed above the float level.
13. After the softener has been running a few minutes in service, proceed to hardness test on outlet water to make sure the water is treated as per requirements.

The system is ready and in service.

7.2 Sanitization

7.2.1 Disinfection of water softeners

The materials of construction of the modern water softener will not support bacterial growth, nor will these materials contaminate a water supply. In addition, during normal use, a softener may become polluted with organic matter, or in some cases with bacteria from the water supply. This may result in an off-taste or odour in the water.

Thus, your softener may need to be disinfected after installation. Some softeners will require periodic disinfection during their normal lifetime. Consult your installing dealer for more information on disinfecting your softener.

Depending on the conditions of use, the softener type, the type of ion exchanger and the disinfectant available, a choice can be made among the following methods.

7.2.2 Sodium or calcium hypochlorite

These materials are satisfactory for use with polystyrene resins, synthetic gel zeolite, greensand and bentonites.

5.25% Sodium hypochlorite

If stronger solutions are used, such as those sold for commercial laundries, adjust the dosage accordingly.

Dosage

Polystyrene resin: set 1.25 mL fluid per 1 L of resin.

Non-resinous exchangers: set 0.85 mL fluid per 1 L.

Brine tank softeners

Backwash the softener and add the required amount of hypochlorite solution to the well of the brine tank. The brine tank should have water in it to permit the solution to be carried into the softener.

Proceed with the normal regeneration.

Calcium hypochlorite

Calcium hypochlorite, 70% available chlorine, is available in several forms including tablets and granules. These solid materials may be used directly without dissolving before use.

Do not let the disinfectant stand for more than 3 hours in the brine tank before the regeneration start.

Dosage

Measure two grains ~ 0.11 mL for 1 L.

Brine tank softeners

Backwash the softener and add the required amount of hypochlorite to the well of the brine tank. The brine tank should have water in it to permit the chlorine solution to be carried into the softener.

Proceed with the normal regeneration.

7.2.3 Electro chlorination

Valves or systems already equipped with an electrochlorinator device or system will be sanitized during the brine draw phase.

8 Operation

8.1 Display during operation

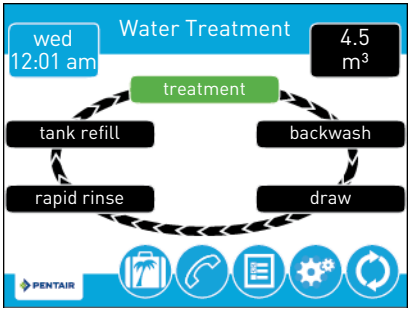

8.2 Display during regeneration

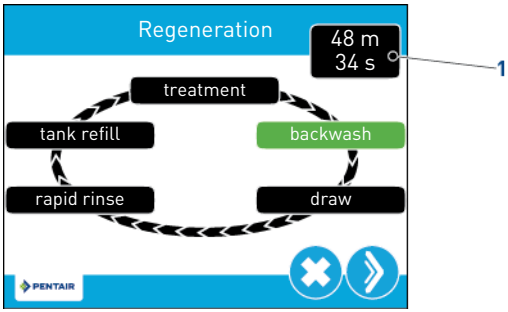

During regeneration, the regeneration cycle wheel shows the regeneration step the valve is advancing to, or has reached (green), and the time remaining in that step (1). Once all regeneration steps are complete the valve returns to treatment position and resumes normal operation. The time remaining in regeneration will be displayed on the home screen in hours and minutes.

Pressing the button during a regeneration cycle immediately advances the valve to the next cycle step position and resumes normal step timing. The button is only shown when the valve is in position and the motor has stopped.

8.3 Controller operation during programming

The controller can only be programmed with the valve in treatment. While being programmed the controller continues to operate normally, monitoring water usage and keeping all displays up to date. Controller programming is stored in memory permanently until reset.

8.4 Manual regeneration

From the home screen, press the regeneration button to access the regeneration screen.

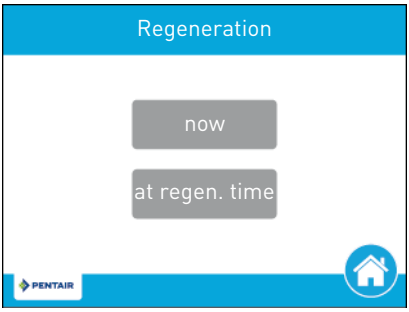

Press **now** to begin a regeneration immediately, or press **at regen. time** to queue the regeneration for the programmed regeneration time (2:00 AM default for softeners, 12:00 AM default for filters). Pressing **at regen. time** again will cancel the manual regeneration.

1. During regeneration, press the button to immediately advance to the next cycle step. Once in regeneration, the volume or time will be displayed below the button .

8.5 Operation during a power failure

The XTR controller includes internal power backup. In the event of power failure, the controller shifts into a power-saving mode. The controller stops monitoring water usage. The display and motor shut down, but it continues to keep track of the time and day for a minimum of eight hours.

The system configuration settings are stored in a non-volatile memory and are stored indefinitely with or without power. After a long power outage, the time of day button may flash indicating it needs to be reset. Press the button to stop the time of day from flashing and reset time if needed.

If power fails while the unit is in regeneration, the controller will save the current valve position before it shuts down. When power is restored, the controller will resume the regeneration cycle from the point where power failed. If power remains off for more than eight hours, upon power restoration the regeneration is cancelled and the piston returns to service.

Caution - material

Risk of damage due to power failure !

Without power, the valve stays in its current position until power is restored.

The system should include all required safety components to prevent overflows resulting from a power failure during regeneration.

The controller will not start a new regeneration cycle without power. If the valve misses a scheduled regeneration due to a power failure, it will queue a regeneration. Once power is restored, the controller will initiate a regeneration cycle the next time that the time of day equals the programmed regeneration time. Typically, this means that the valve will regenerate one day after it was originally scheduled. If the treated water output is important and power interruptions are expected, the system should be set up with a sufficient reserve capacity to compensate for regeneration delays.

8.6 Remote lockout

If a remote switch is installed, the controller will not allow the system to go into regeneration until the regeneration lockout input signal to the controller is cleared. This requires opening the contact closure to clear the lockout condition. The recommended gauge wire is 20 with a maximum length of 500 feet. See Electrical connections [→Page 46].

8.7 Sleep mode

The controller will go into sleep mode if no button is pressed after five minutes. All other controller functions will continue to operate. The display will wake from sleep mode when any part of the display is touched.

9 Maintenance

Mandatory

Cleaning, maintenance and service operation shall take place at regular intervals and must be done by qualified personnel only in order to guarantee the proper functioning of the complete system.

Report mainteance done in the Maintenance chapter of the User Guide document.

Failure in respecting above instructions may void the warranty!

9.1 General system inspection

Mandatory

Must be done, at minimum, once a year !

9.1.1 Water quality

9.1.1.1 Valve used for softening

1. Raw water total hardness.
2. Treated water hardness.

9.1.1.2 Valve used for filtration

1. Check for raw water analysis and filter's targeted contaminants concentration.
2. Check for treated water analysis and compare with raw water data.

9.1.2 Mechanical Checks

1. Inspect general condition of softener/filter and associated ancillaries and check for any leaks, ensure valve connection to piping is made with adequate flexibility as per manufacturer instruction.
2. Inspection of electrical connections, verify wiring connections and search for evidence of overloading.
3. Verify settings of electronic timer, verify regeneration frequency, and make sure the valve configuration is appropriate for media and tank size.
4. Check water meter, if present, report water meter settings and compare with previous inspection.
5. If water meter is present, verify total water consumption compared to previous visit.
6. If pressure gauges are installed before and after softening/filtering system, verify and record static and dynamic pressure, reporting pressure drop. Verify that inlet pressure respects valve and softening/filtering system limits. Verify that pressure drop stay stable year on year, adapt backwash duration if required.
7. If pressure gauges are not present, but suitable points exist, install temporary pressure gauge(s) to perform precedent point.

9.1.3 Regeneration test

9.1.3.1 Valve used for softening

1. Check condition of brine tank and any associated equipment.
2. Check salt level in brine tank.
3. Initiate regeneration test.
   - ⇨ Check brine draw during brine draw stage.
   - ⇨ Check brine tank refill.
   - ⇨ Check operation of safety brine valve, where fitted.
   - ⇨ Check for brine draw off levels.
   - ⇨ Check for resin loss at the drain during regeneration.
   - ⇨ Where fitted, check for satisfactory operation of solenoid, i.e. outlet shut off during regeneration and/or brine line shut off valve(s).
4. Test and record Total Hardness of outlet water from softener vessel(s).

9.1.3.2 Valve used for filtration

1. Initiate manual regeneration and observe flow to drain.
2. Make sure flow rate correspond to DLFC configuration.
3. Check for media loss at the drain during backwash.
4. Check to see if water runs clear at the end of the backwash cycle.
5. Observe flow fast rinse cycle and measure pressure drop thought the filter system. Pressure drop after fast rinse should return equal or very close to pressure drop recorded after system start-up.
6. Where fitted, check for satisfactory operation of solenoid valve(s) i.e. outlet shut off during regeneration.

9.2 Recommended maintenance plan

9.2.1 Valve used for softening

Items	1 year	2 year	3 year	4 year	5 year
Injector & filter	Clean	Clean	Clean	Clean	Clean/ replace if necessary
BLFC***	Clean	Clean	Clean	Clean	Clean/ replace if necessary
DLFC***	Clean	Clean	Clean	Clean	Clean/ replace if necessary
Bypass (if present, contains Orings***)	Clean	Clean	Clean	Clean	Clean/replace if necessary
Piston*	-****	-****	Replace	-****	-****
Seals & spacers*	-****	-****	Replace	-****	-****
Brine valve	Check/clean/ replace if necessary	Check/clean/ replace if necessary	Check/clean/ replace if necessary	Check/clean/ replace if necessary	Replace
O-rings***	Check for watertightness /clean or replace in case of leakage	Check for watertightness /clean or replace in case of leakage	Check for watertightness /clean or replace in case of leakage	Check for watertightness /clean or replace in case of leakage	Check for watertightness /clean or replace in case of leakage
Motor	Check	Check	Check	Check	Replace
Optical sensor	Check	Check	Check	Check	Replace
Gearing	Check	Check	Check	Check	Check/ replace if necessary
Encoding wheel	Clean	Clean	Clean	Clean	Clean
Inlet hardness	Check	Check	Check	Check	Check
Residual hardness	Check/adapt mixing screw if necessary	Check/adapt mixing screw if necessary	Check/adapt mixing screw if necessary	Check/adapt mixing screw if necessary	Check/adapt mixing screw if necessary
Electronic/ settings**	Check	Check	Check	Check	Check/ replace if necessary
Transformer**	Check	Check	Check	Check	Check/ replace if necessary
Meter* (if present)	Check and Clean	Check and Clean	Check and Clean	Check and Clean	Replace
Meter cable (if present)	Check	Check	Check	Check	Check/ replace if necessary

Items	1 year	2 year	3 year	4 year	5 year
Valve watertightness	Check	Check	Check	Check	Check
Valve to piping watertightness	Check	Check	Check	Check	Check

* Wear parts - durability strongly affected by raw water quality and regeneration frequency.

** Electronic parts – durability strongly affected by power source quality and stability.

*** Elastomer durability is strongly affected by raw water concentration in chlorine and its derivative.

**** Seals & Spacer cartridge is equipped with O-rings that ensure watertightness by compression, therefore by unmounting/remounting the same cartridge may cause it not to be watertight anymore, each time the seals & and spacer cartridge is extracted from the valve body it must be pre-placed by a new one. Note that extraction the piston may also extract the Seals and spacer cartridge at the same time for this reason it not advised to unmount the piston, clean and lubricate it with silicon grease as with former residential fleck valves for the regular maintenance, but only to replace it at least every 3 years.

9.2.2 Valve used for filtration

Items	1 year	2 year	3 year	4 year	5 year
Bypass (if present, contains Orings***)	Clean	Clean	Clean	Clean	Clean/replace if necessary
Piston*	-****	-****	Replace	-****	-****
Seals & spacers*	-****	-****	Replace	-****	-****
O-rings***	Check for watertightness /clean or replace in case of leakage	Check for watertightness /clean or replace in case of leakage	Check for watertightness /clean or replace in case of leakage	Check for watertightness /clean or replace in case of leakage	Check for watertightness /clean or replace in case of leakage
Motor	Check	Check	Check	Check	Replace
Optical sensor	Check	Check	Check	Check	Replace
Gearing	Check	Check	Check	Check	Check/ replace if necessary
Encoding wheel	Clean	Clean	Clean	Clean	Clean
Electronic/ settings**	Check	Check	Check	Check	Check/ replace if necessary
Transformer**	Check	Check	Check	Check	Check/ replace if necessary
Meter*	Check and Clean	Check and Clean	Check and Clean	Check and Clean	Replace
Meter cable	Check	Check	Check	Check	Check/ replace if necessary
Valve watertightness	Check	Check	Check	Check	Check
Valve to piping watertightness	Check	Check	Check	Check	Check

* Wear parts - durability strongly affected by raw water quality and regeneration frequency.

** Electronic parts – durability strongly affected by power source quality and stability.

*** Elastomer durability is strongly affected by raw water concentration in chlorine and its derivative.

**** Seals & Spacer cartridge is equipped with O-rings that ensure watertightness by compression, therefore by unmounting/remounting the same cartridge may cause it not to be watertight anymore, each time the seals & and spacer cartridge is extracted from the valve body it must be pre-placed by a new one. Note that extraction the piston may also extract the Seals and spacer cartridge at the same time for this reason it not advised to unmount the piston, clean and lubricate it with silicon grease as with former residential fleck valves for the regular maintenance, but only to replace it at least every 3 years.

9.3 Recommendations

9.3.1 Use original spare parts

Caution - material

Risk of damage due to use of non-genuine spare parts !

To ensure correct operation and safety of the device, only use original spare parts and accessories recommended by the manufacturer.

Usage of non-genuine spare parts voids all warranties.

Parts to keep in stock for potential replacements are the pistons, S&S kit, injectors, micro-switches and motors. Refer to maintenance sheet.

9.3.2 Use original approved lubricants

- P80 Emulsion lubricant (water base lubricant)

9.3.3 Maintenance instructions

- Disinfect and clean the system at least once a year or if the treated water has an off-taste or an unusual odor;
- perform a hardness test every year of both inlet and treated water.

9.4 Cleaning and maintenance

9.4.1 First steps

Before any cleaning or maintenance procedure, complete the following steps:

Mandatory

These operations must be performed before any cleaning or maintenance procedure !

1. Unplug the wall-mounted transformer.
2. Shut off water supply or put bypass valve(s) into bypass position.
3. Relieve system pressure before performing any operations.

9.4.2 Controller motor replacement

1. Remove the controller, see Controller replacement [→Page 101].
2. Disconnect the optical sensor (**3**).
3. Disconnect the motor.
4. Open the motor clips (**1**) and pull out the old motor (**2**).
5. Change the motor (**2**).
6. Reverse above procedure steps to rebuild.

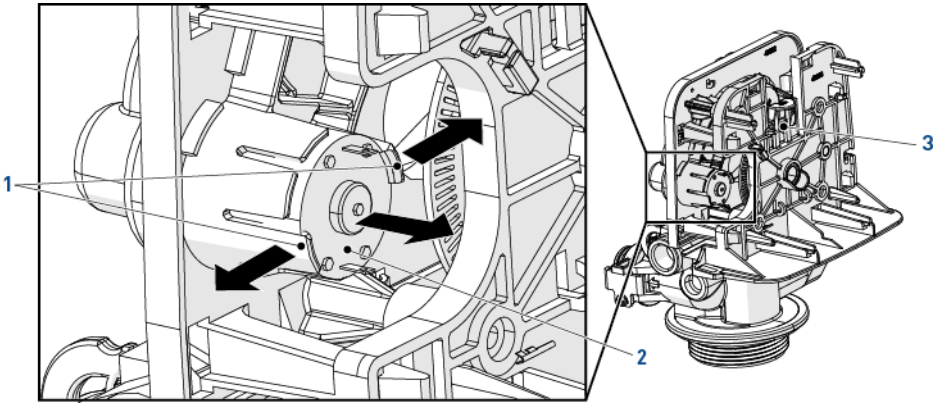

9.4.3 Controller replacement

1. Press the cover clips (**2**) on each side and open the cover (**1**).
2. Press the board clips (**3**) and release the controller (**4**).
3. Disconnect the old controller.
4. Connect the new controller, see Electrical connections [→Page 46]
5. Reverse above procedure steps to rebuild.

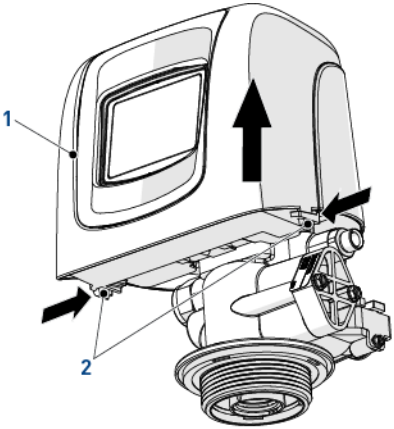

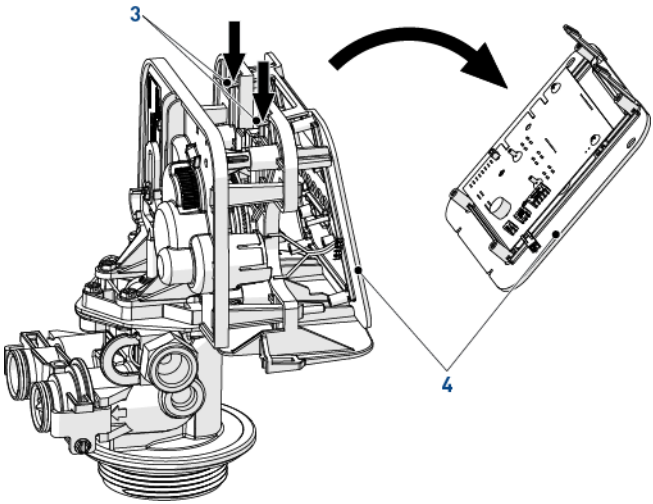

9.4.4 Power head disassembly/replacement

1. Remove the controller, see Controller replacement [→Page 101].
2. Using a 6 mm wrench or flat screwdriver, unscrew (**2**).
3. Using a 8 mm wrench or flat screwdriver, unscrew (**1**).
4. Separate the power head (**3**) from the valve body (**4**).
5. Change the power head (**3**).
6. Reverse above procedure steps to rebuild. Mind the core marker and align the small holes of the gears for easy reassembly.

Caution - material

Risk of damage due to bad mounting !

When assembling the gearing system (**3**) on the valve body (**4**), make sure to put the brighter part of the piston axe (**5**) on the left as shown beside.

Tip

These operations need to be performed before any cleaning or maintenance procedure.

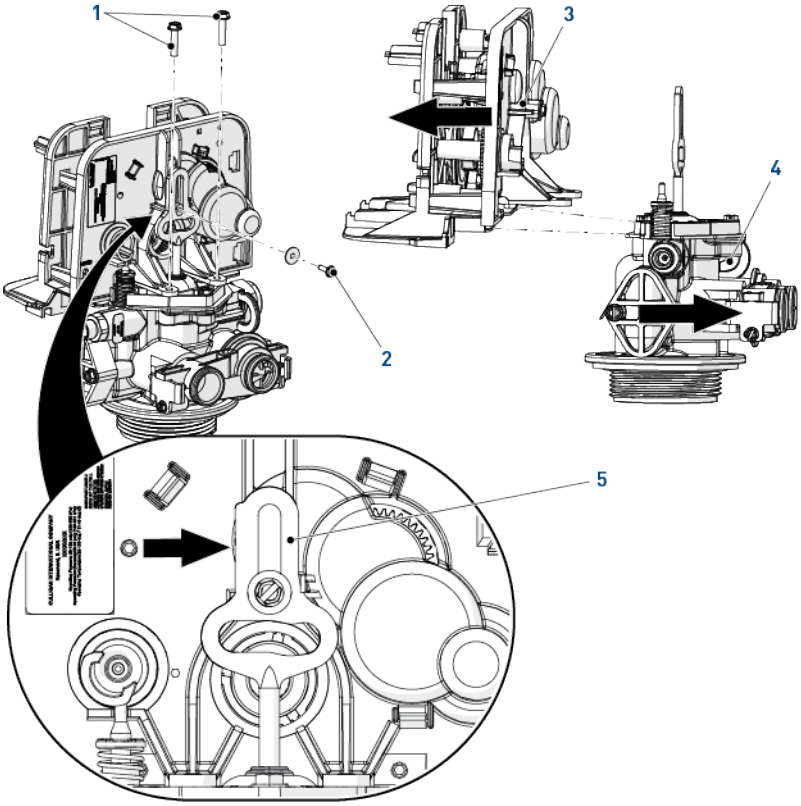

9.4.5 Piston and/or seal and spacer kit and /or brine valve replacement

1. Remove the gearing system, see Power head disassembly/replacement [→Page 102].
2. Remove the screws (**1**).
3. Remove the piston (**3**) and the top plate (**2**) by pulling the top plate (**2**) on the points indicated by arrows.
4. Remove the brine valve (**7**).
5. Change the piston (**3**) and the seals & spacers cartridge (**5**).

Mandatory

Pentair recommends always to change piston and seals & spacers simultaneously !

Info

The larger spacer (6) is the lower part of the seals & spacers cartridge.

6. Change or clean the brine valve (**7**).
7. Lubricate all seals (**4**+**5**+**7**) and with approved P-80® Emulsion lubricant only.

Caution - material

Risk of damage due to wrong lubricant use !

Do not use petroleum-based lubricants such as Vaseline, oils, or hydrocarbon-basedlubricants.

Do not use silicon grease.

Use only P-80® Emulsion lubricant (water based lubricant) !

8. Reverse above procedure steps to rebuild.

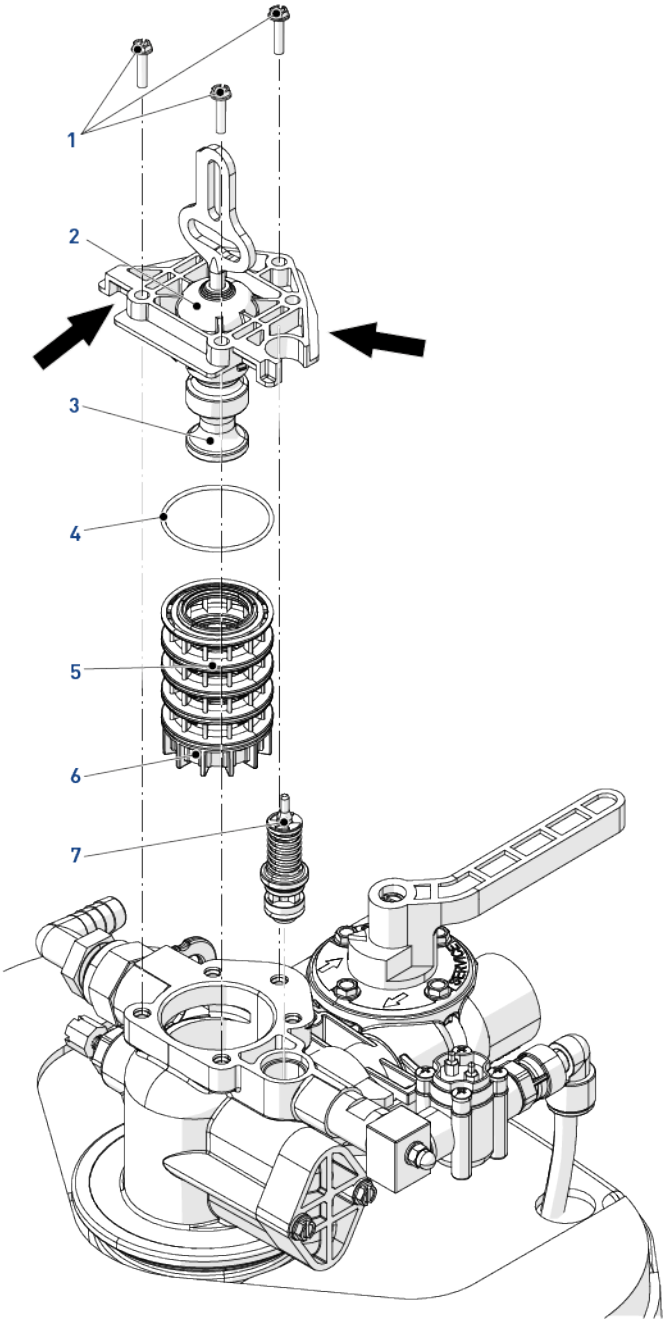
1
2
3
4
5
6
7

9.4.6 Injector cleaning

1. Remove the screws (**4**).
2. Remove the cap injector (**3**).
3. Remove the seal (**5**) taking note of its position.

Info

Depending of configuration, the position of the seal can be different as shown.

The mid part of the seal should be aligned with the position of the injector.

4. Using the pusher (**2**), remove the injector (**1**).

Caution - material

Risk of injector damage due to bad removing !

To avoid any damage on the injector, use only the pusher to remove it.

5. Remove the screen (**7**).
6. Remove the injector plug (**6**).

Info

The plug has 2 slots in at the top. The plug can be removed by hooking something into one of these slots from the center of the plug.

7. Clean or change the injector (**1**), the screen (**7**), the injector plug (**6**) and the seal (**5**).
8. Lubricate all seals with approved lubricant only.
9. Reverse above procedure steps to rebuild.

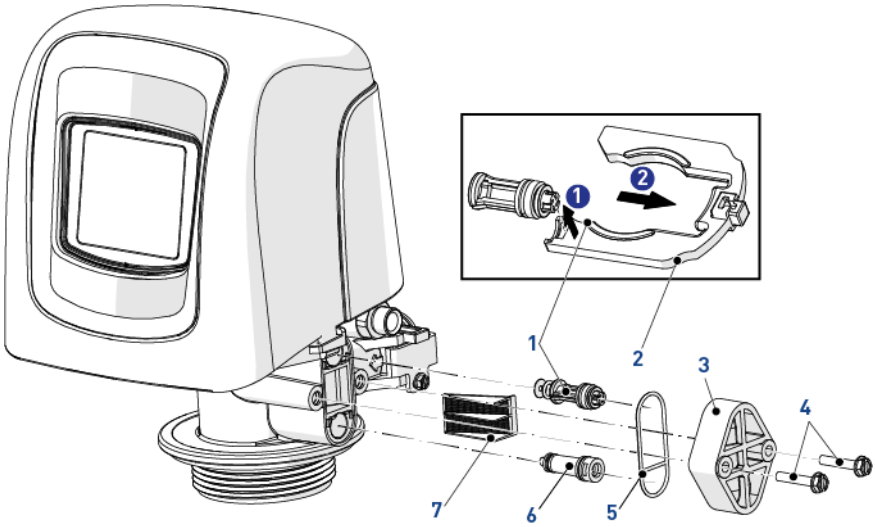

9.4.7 BLFC cleaning

1. Using a wrench, remove the BLFC holder (**1**).
2. Using pliers, remove the grid (**4**) from BLFC holder (**1**).
3. Remove the BLFC washer (**3**) from the grid (**4**).
4. Clean with a terry cloth or change the BLFC washer (**3**) and the seal (**2**).
5. Clean the grid (**4**).
6. Lubricate the seal (**2**) with approved lubricant only.

Caution - material

Risk of damage due to wrong lubricant use !

Do not use petroleum-based lubricants such as Vaseline, oils, or hydrocarbon-basedlubricants.

Do not use silicon grease.

Use only P-80® Emulsion lubricant (water based lubricant) !

7. Reverse above procedure steps to rebuild.

Mandatory

The washers (3) have to be installed with their chamfered side upfront the water stream flow.

Flow indication must be visible after the washer (**3**) is placed on the holder (**1**).

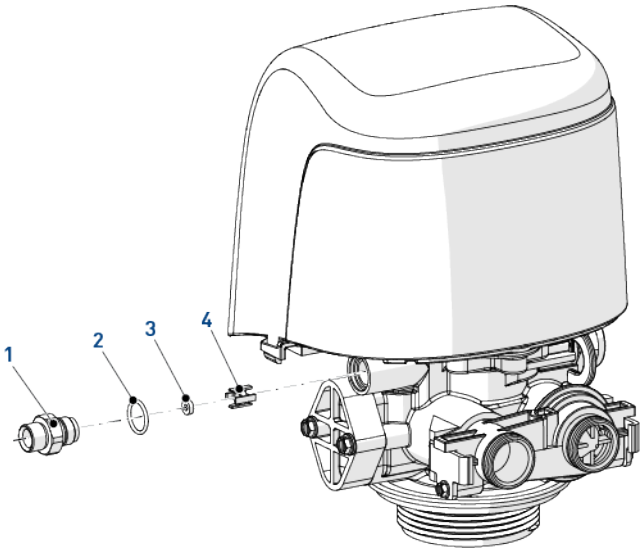

9.4.8 DLFC cleaning

1. Remove the DLFC clip (**1**).
2. Remove the DLFC holder (**3**).
3. Using a flat screwdriver, remove the DLFC washer (**2**) from DLFC holder (**3**).
4. Clean or change the DLFC washer (**2**).
5. Reverse above procedure steps to rebuild.

Mandatory

The washers (2) have to be installed with their chamfered side upfront the water stream flow.

Flow indication must be invisible after the washer (**2**) is placed on the holder (**3**).

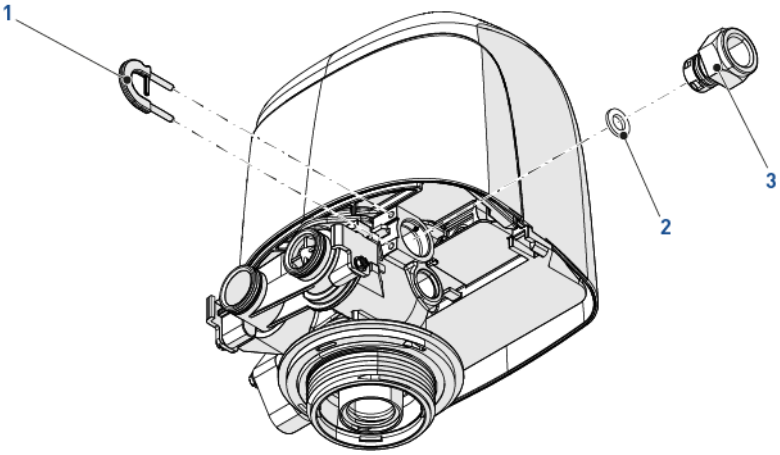

9.4.9 Optical sensor replacement

1. Remove the controller, see Controller replacement [→Page 101].
2. Disconnect the wire from the motor to the optical sensor (**4**).
3. Release the optical sensor support (**1**) by pushing it back and up as shown.
4. Release the optical sensor (**3**) from its support (**1**) by pressing the clips (**2**).
5. Change the optical sensor (**3**).
6. Reverse above procedure steps to rebuild.

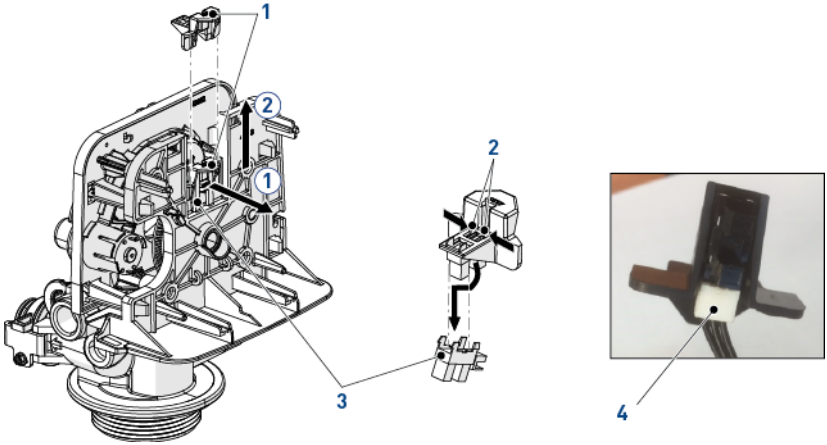

9.4.10 Encoding wheel cleaning

1. Remove the controller, see Controller replacement [→Page 101].
2. With a small brush, clean the encoding wheel (**1**).
3. Reverse above procedure steps to rebuild.

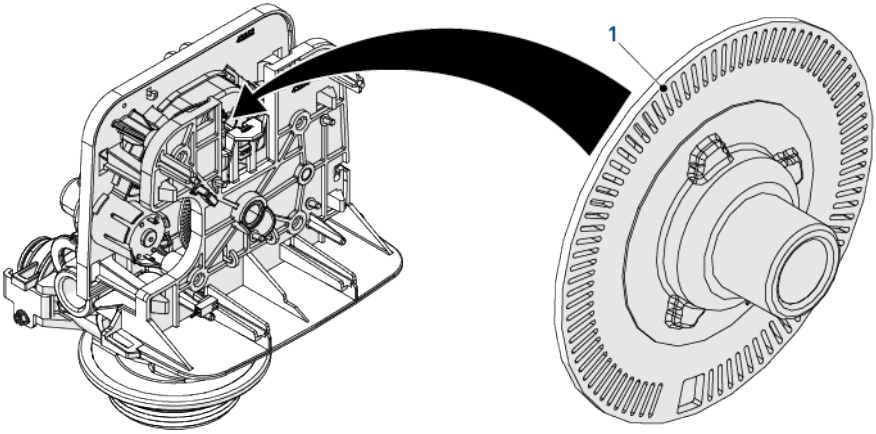

9.4.11 Valve on tank assembly

1. Lubricate the seals with approved silicone grease.
2. Spin the valve (**1**) onto the tank (**2**), ensuring the threads are not cross-threaded.
3. Rotate the valve (**1**) clockwise and freely, without using force until it comes to a stop.

Info

This stop position is considered point zero.

4. Rotate the valve (**1**) clockwise from point zero to between ¼ turn and ½ turn.

Caution - material

Risk of damage due to excessive force !

Do NOT exceed 27 Nm of torque when installing the valve. Exceeding this limit may damage the threads and cause failure.

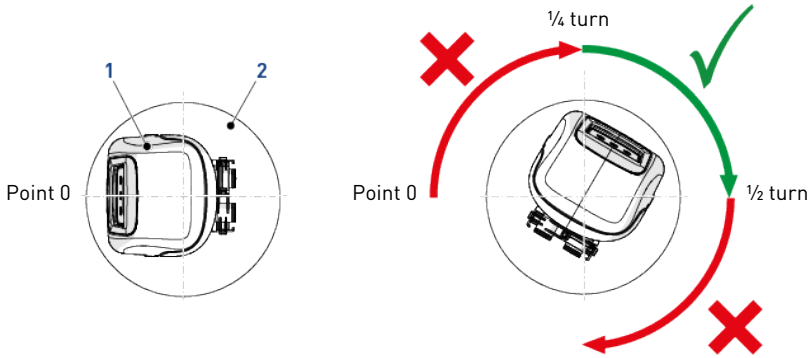

10 Troubleshooting

Problem	Cause	Solution
Water softener fails to regenerate automatically.	Cord plugged into intermittent or switched off power source.	Connect to constant power source.
	Disconnected/faulty meter cable.	Reconnect/replace cable.
	Defective power cord.	Replace cord.
	Defective controller, meter or sensor.	Replace or repair.
	Bad programming.	Program correctly.
Regeneration at wrong time.	Controller improperly set, due to power failure.	Reset controller.
Loss of capacity.	Increased raw water hardness.	Reset unit to the new hardness.
	Brine concentration and/or quantity.	Keep brine tank full of salt at all times. Clean it yearly. Salt may be bridged. If using a salt grid plate ensure refill water is over it.
	Resin fouling.	Call dealer, find out how to confirm it, clean the resin and prevent future fouling.
	Poor distribution, Channeling (uneven bed surface).	Call dealer. Check distributors and backwash flow.
	Internal valve leak.	Call dealer. Replace spacers, seals and/or piston.
	Resin age.	Call dealer. Check for resin oxidation caused by Chlorine. Mushy resin.
	Resin Loss.	Call dealer. Check for correct bed depth. Broken distributors.
Poor water quality.	Check items listed in loss of capacity.	
	Bypass valve open.	Close by-pass valve.
	Channeling.	Check for too slow or high service flow. Check for media fouling.
	Mixing wrongly set.	Set mixing correctly.
High salt usage.	High salt setting.	Adjust refill time.
	Excessive water in brine tank.	See problem "Excessive water in brine tank".

Problem	Cause	Solution
Loss of water pressure.	Scaling/Fouling of inlet pipe.	Clean or replace pipeline. Pretreat to prevent.
	Fouled resin.	Clean the resin. Pretreat to prevent.
	Improper backwash.	Too many resin fines and/or sediment. Call dealer, reset backwash flow rate, and/or adjust time.
Excessive water in brine tank and/or salty water to service.	Plugged Drain Line.	Check flow to drain. Clean flow control.
	Dirty or damaged brine valve.	Clean or replace brine valve.
	Plugged injector.	Clean injector and replace screen.
	Low inlet pressure.	Increase pressure to allow injector to perform properly (1.4 bar minimum).
	Controller not cycling.	Replace controller.
Softener fails to use salt.	Plugged/restricted drain line.	Clean drain line and/or flow control.
	Injector is plugged.	Clean or replace injector and screen.
	No water in brine tank.	Check for restriction in BLFC. Ensure safety float is not stuck.
	Water pressure is too low.	Line pressure must be at least 1.4 bar.
	Brine line injects air during brine draw.	Check brine line for air leaks.
	Internal valve leak.	Call dealer. Check piston, seals and spacers for scratches and dents.
Valve cycles continuously.	Faulty controller.	Replace controller.
	Wrong programming.	Check programming.
Continuous flow to drain.	Foreign material in control valve.	Call dealer. Clean valve, rebuild unit.
	Internal control valve leakage.	
	Valve jammed in regeneration position.	
	Motor stopped or jammed during regeneration.	Replace motor.

10.1 Error detection

If an error in valve or controller function occurs, an alarm will sound and the home screen will display the error alert button and the alarm button .

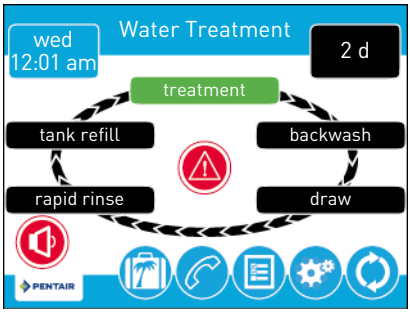

Press the alarm button to mute the alarm.

Press the error alert button to view information about the error.

If the display is in sleep mode when an error occurs, the screen will turn on for five minutes. The error will beep for one second per minute until the error is cleared. If the error is not cleared after five minutes, the screen will switch to power saving mode and display the error alert button as a screen saver.

10.2 Error alerts

Info

An error alert appears on the home screen if an error condition is detected. Press the error alert button to view the error message.

Most error alerts are cleared at regeneration. If the error persists following a regeneration attempt the appropriate reset and recovery procedure below or contact technical support.

Error screen display	Cause	Reset and recovery
Optical Sensor Undesired change detected in the optical sensor	An undesired optical sensor state change occurred.	Non-critical error. Extra optical sensor pulse detected. Press the Regeneration button to advance motor to clear error.
Flow meter error Continuous Flow	The flow meter has reported continuous flow for more than 24 hours.	Error will clear when flow to meter drops below 0.5 gpm or 1 Lpm. If continuous flow is expected, turn plumbing leak detection off in Master Settings.
Over current Motor over current detected	Motor drew too much current.	Attempt to perform a manual regeneration. If error continues, call technical support.

Error screen display	Cause	Reset and recovery
Flow meter error No flow detected	No flow has been detected for 7 days.	Error will clear when a flow pulse is detected. Check to ensure meter cable is properly installed and meter spins freely. Clear meter of debris if necessary. If error continues, call technical support.
No regeneration for 100 days	The valve has not regenerated in more than 100 days.	Initiate a regeneration see Manual regeneration [→Page 91].
Service Interval	Service Interval controller has expired.	From within Master Settings, navigate to the Assistance/Mainten. Interval screen and set a new Service Interval time.
Memory Corruption Error	Internal memory inconsistent or corrupted.	1. Cycle power to XTR controller. 2. Drain supercap and cycle power to XTR controller. 3. If error continues, call technical support.
Motor Stall Motor Run-On No changes detected in the optical sensor for 6 seconds	No state changes in the optical sensor are detected for six seconds.	Unplug the unit and plug back in. Allow the control to attempt to find position again. Verify the optical sensor is in place with the wires connected to the circuit board. Verify the motor and drive train components are in good condition and assembled properly. Check the valve and verify that the piston travels freely. Replace/reassemble the various components as necessary. Plug the unit back in and observe its behaviour. If the error reoccurs, unplug the unit, put it into bypass and contact technical support.

11 Spare parts and options

11.1 Valve parts list

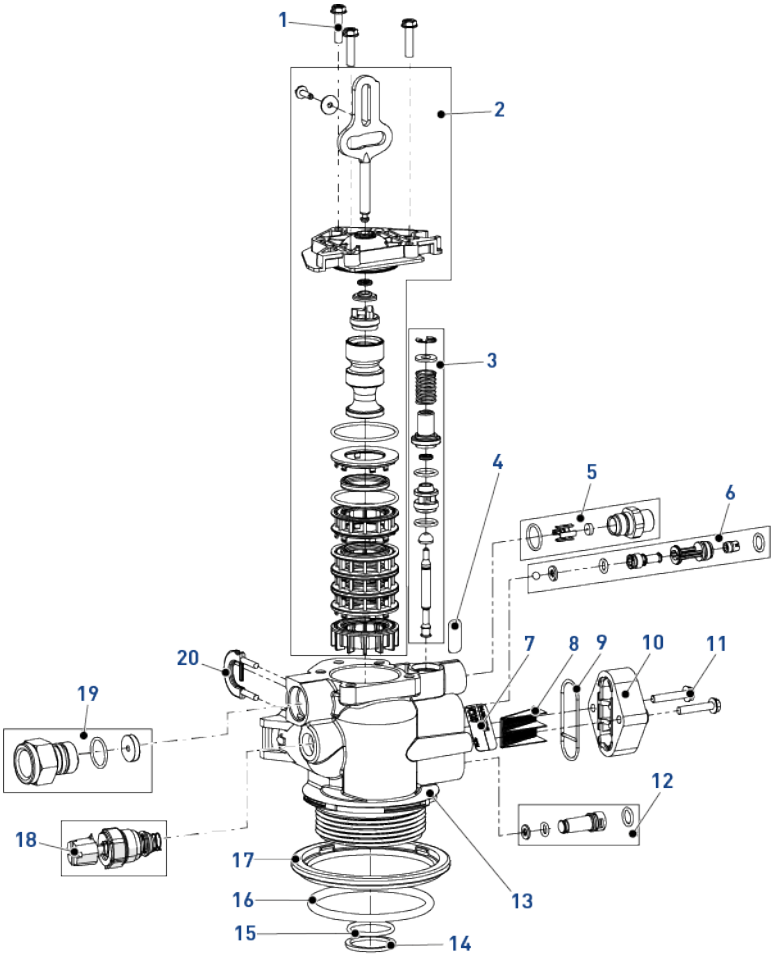

Item	Part number	Description	Packaging quantity
1	18261SP	Screw, hex washer head, #10-24 x 0.81"	10
2	BR61837	Piston and seal kit assembly, downflow 5800	1
-	BR61838	Piston and seal kit assembly, upflow 5800	1
3	60032	Brine valve 4600/5600	1
4	13333	Label, injector blank	1
5	18332-0.12	BLFC, 0.125 gpm, 5000/5600/9000	1
-	18332-0.25	BLFC, 0.25 gpm, 5000/5600/9000	1

Item	Part number	Description	Packaging quantity
-	18332-0.50	BLFC, 0.50 gpm, 5000/5600/9000	1
-	18332-1	BLFC, 1.00 gpm, 5000/5600/9000	1
6	18272-000SP	Injector assembly, 1610, #000, brown	10
-	18272-00SP	Injector assembly, 1610, #00, violet	10
-	18272-0SP	Injector assembly, 1610, #0, red	10
-	18272-1SP	Injector assembly, 1610, #1, white	10
-	18272-2SP	Injector assembly, 1610, #2, blue	10
-	18272-3SP	Injector assembly, 1610, #3, yellow	10
7	10759	Label 0.5 gpm 1.5 lbs salt/min	1
8	18271SP	Screen injector 5000	10
9	18301SP	Seal injector	10
10	18277	Cap injector	1
-	18278-20	Injector cap assembly, 1650 regulated, 5000, 20 psi, upflow	1
-	18278-30	Injector cap assembly, 1650 regulated, 5000, 30 psi, upflow	1
11	18262SP	Screw, hex washer head, #10-24 x 1"	10
12	18276-01	Injector assembly, plug with o-rings	1
13	BR61857-01	Valve body assembly 5800 Filter (includes items 14, 15, 16, 17 and 18)	1
-	BR61857-20	Valve body assembly 5800 w/mixing (includes items 14, 15, 16, 17 and 18)	1
14	13030SP	Retainer, distributor tube o-ring	50
15	13304-01SP	O-ring-560CD	10
16	18303-01SP	O-ring top of the tank	10
17	18569	Retainer, tank seal	1
18	24509-01	Mixing assembly residential	1
19	24078-EMPTY	DFLC, plastic, blank & hose barb bent	1
-	24078-0.8	DFLC, plastic, 0.80 gpm & hose barb bent	1
-	24078-1	DFLC, plastic, 1.0 gpm	1
-	24078-1.2	DFLC, plastic, 1.2 gpm & hose barb bent	1
-	24078-1.5	DFLC, plastic, 1.5 gpm & hose barb bent	1
-	24078-2	DFLC, plastic, 2.0 gpm & hose barb bent	1
-	24078-2.4	DFLC, plastic, 2.4 gpm & hose barb bent	1
-	24078-3	DFLC, plastic, 3.0 gpm & hose barb bent	1
-	24078-3.5	DFLC, plastic, 3.5 gpm & hose barb bent	1
-	24078-4	DFLC, plastic, 4.0 gpm & hose barb bent	1

Item	Part number	Description	Packaging quantity
-	24078-5	DFLC, plastic, 5.0 gpm & hose barb bent	1
-	24078-6	DFLC, plastic, 6.0 gpm & hose barb bent	1
-	24078-7	DFLC, plastic, 7.0 gpm& hose barb bent	1
-	26147-8	DFLC, 1" assembly 8 gpm	1
-	26147-9	DFLC, 1" assembly 9 gpm	1
-	26147-10	DFLC, 1" assembly 10 gpm	1
-	26147-12	DFLC, 1" assembly 12 gpm	1
-	26147-15	DFLC, 1" assembly 15 gpm	1
20	18312SP	Retaining clip drain	10
Not shown	40947-01	Plug, brine valve with o-ring 560 CD	1
Not shown	26958	BLFC module plug assembly with o-ring	1

11.2 Power head parts list

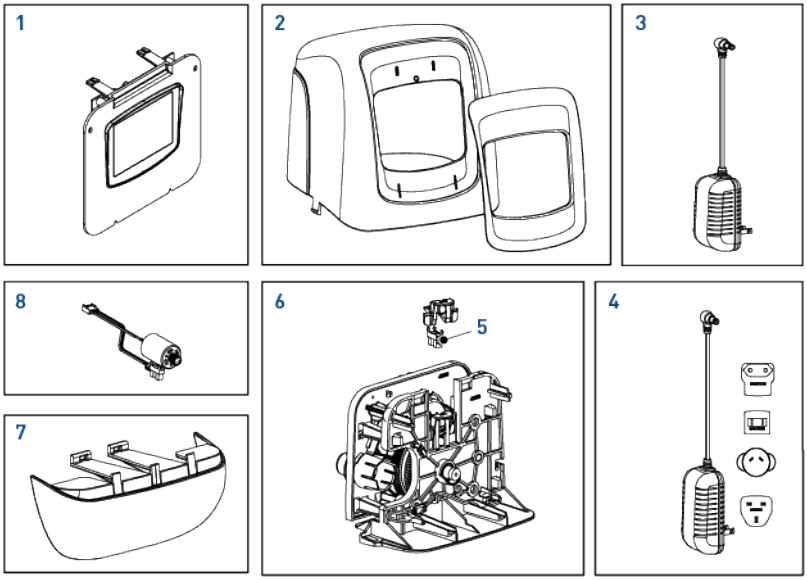

Item	Part number	Description	Packaging quantity
1	61931-03	Controller XTR assembly with logo	1
-	61931-04	Controller XTR assembly without logo	1
2	BR61832-00	Cover assembly, black/blue	1
-	BR61832-01	Cover assembly, black/black	1

Item	Part number	Description	Packaging quantity
3	43291	Transformer 12V UL	1
4	44162	Transformer, international, 12 V UL	1
5	1235373	Optical sensor	1
6	BR61836	Panel gear assembly	1
7	43715	Cover, lower	1
8	BR61835	Motor assembly	1

11.3 Safety brine valves list

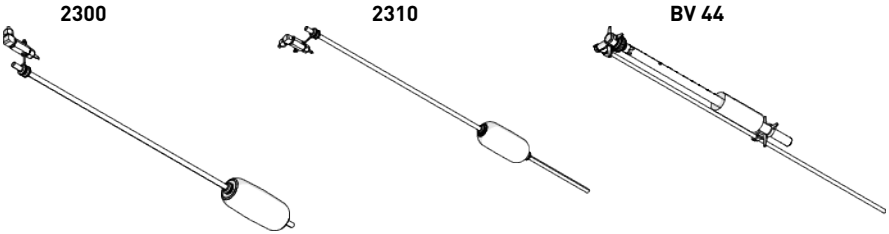

Item	Brine system	Part number	Description	Packaging quantity
-	1600	27833	Safety Brine Valve 2300 - Without Air-Check	24
-		27834	Safety Brine Valve 2300 - HW - Without Air-Check	24
-		60067-03	Safety Brine Valve 2310 - Without Air-Check	24
-		25687	Brine Valve 44 - 914mm	10
-		18961	Brine Valve 44 - 1250mm	10

11.4 Safety brine valves 2310 parts list

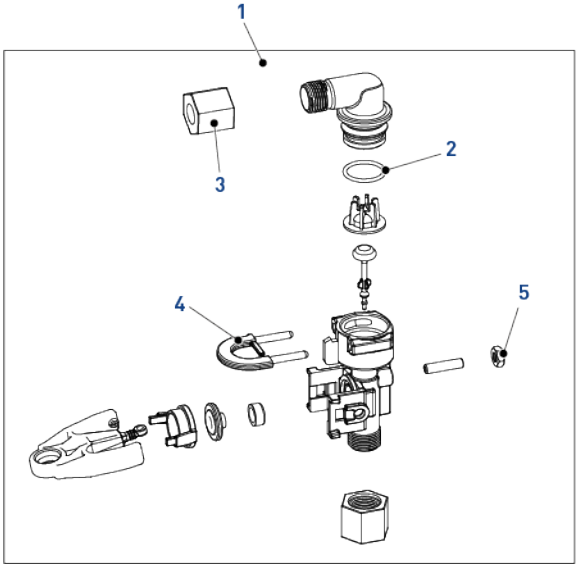

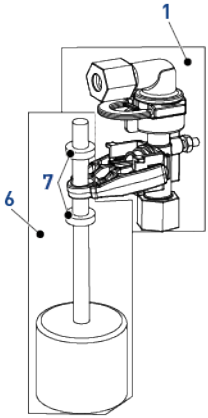

Item	Part number	Description	Packaging quantity
1	60014SP	Safety brine body, 2310	10
2	11183-01SP	O-ring	50
3	19625SP	Brine Valve 1650 plastic nut assy	10
4	18312SP	Retainer, drain	10
5	19805SP	Plastic SBV 2310 Nut	50
6	60068-30SP	New Float assy 2310	10
7	10150SP	Grommet pass rod 2300/2310/2350	50

11.5 Bypass valve assembly list

11.5.1 Plastic bypass (no yoke)

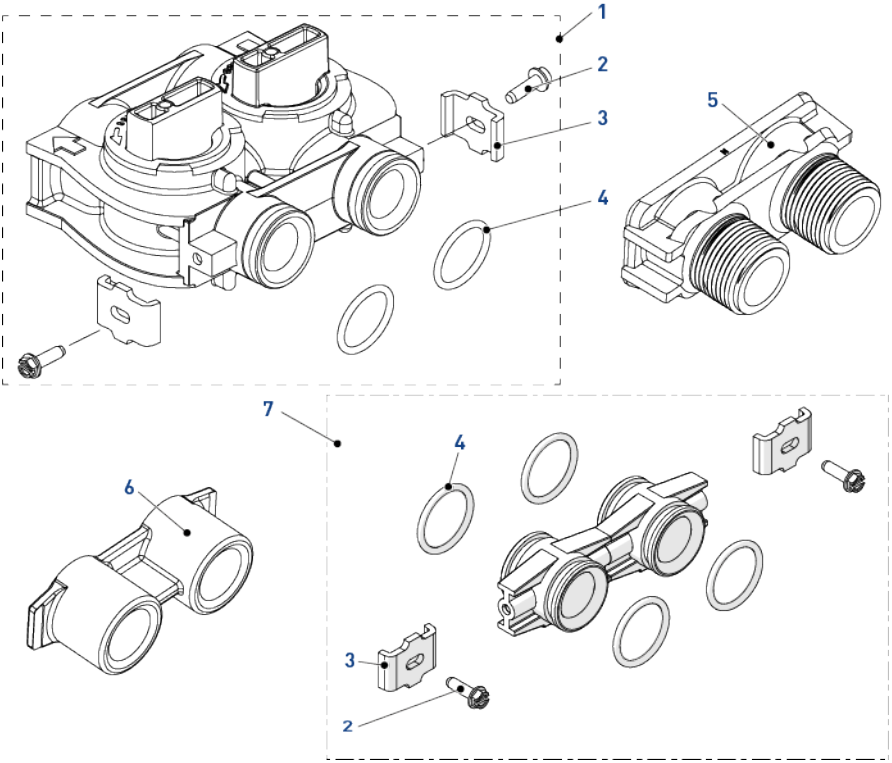

Item	Part number	Description	Packaging quantity
1	BU26054	Bypass plastic	1
2	13314SP	Screw, slot ind, hex, 8-18 x 0.60"	50
3	13255SP	Clip mounting	12
4	13305-01SP	O-ring	10
5	18706-10	Yoke, 1", BSP, male, plastic	1
-	18706-12	Yoke, ¾", BSP, male, plastic	1
-	24689	Yoke, ¾", BSP, male, brass	1
6	13398-10	Yoke 1", BSP, female, brass	1
7	Kit 256	Adapter assembly, kit coupling, with o-rings	1

11.5.2 1" BSP female stainless steel bypass

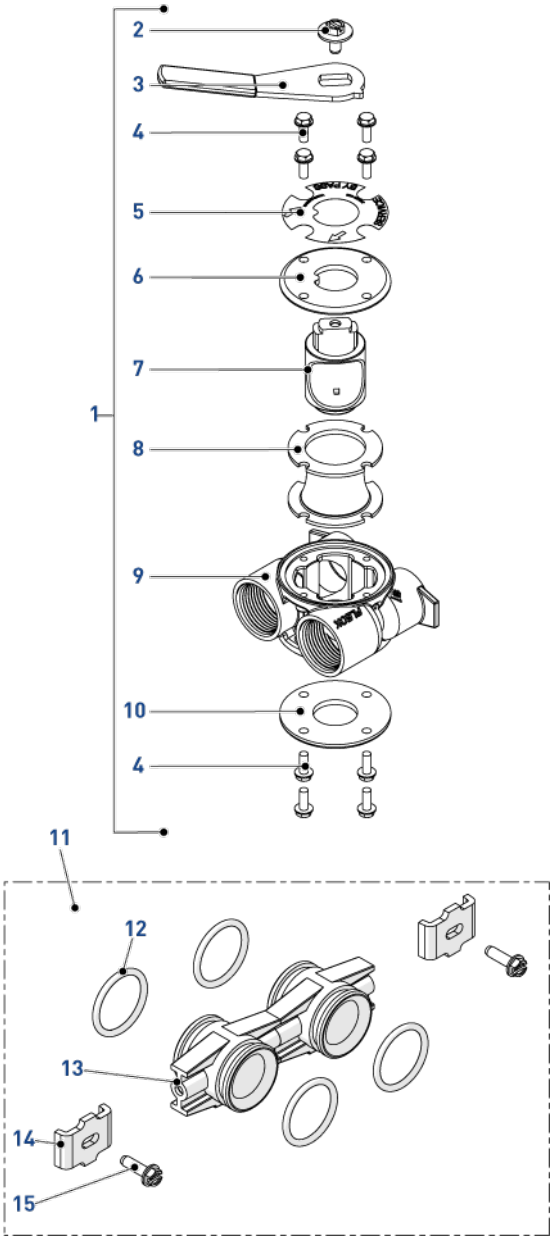

Item	Part number	Description	Packaging quantity
1	BU28502	Bypass Stainless Steel 1" BSP	1

Item	Part number	Description	Packaging quantity
2	13386SP	Screw Hex Hd Mach 1/4-20 X 1 Or Slot Hex	10
3	24419-10SP	Bypass handle red	10
4	15727	Screw, Hex washer head 10-24 x 0.5"	8
5	13604-01	Label bypass standard	1
6	BU11978	Cover bypass, Top	1
7	BU11972	Plug, bypass	1
8	14105SP	Seal, bypass, 560CD	5
9	40634-10	Bypass body, 1" BSP, stainless steel	1
10	11986	Cover bypass, Bottom	1
11	Kit 256	Adapter assembly, kit coupling, with o-rings	1
12	13305-01SP	O-ring	10
13	13255SP	Clip mounting	12
14	13314SP	Screw, slot ind, hex, 8-18 x 0.60"	50

11.6 Distribution systems parts list

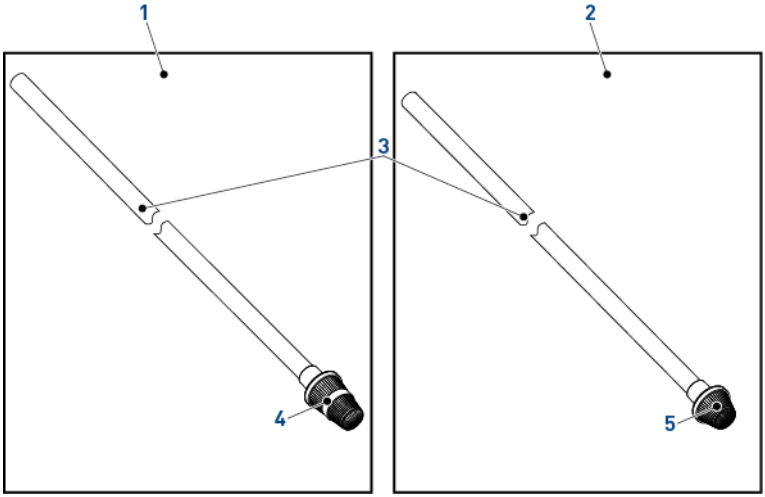

Item	Part number	Description	Packaging quantity
1	27827	Distributor assy, 1" high flow 1 m 10	24
-	25645	Distributor assy, 1" high flow 1 m 95	24
-	BU28508	Distributor assy, 1" high flow HW 1m10	24
-	21675	Distributor assy, 1" high flow HW 1m88	12
2	27828	Distributor assy, 1" UF & high capacity 1 m 10	24
-	BU28509	Distributor assy, 1" UF & high capacity HW 1 m 10	24

Item	Part number	Description	Packaging quantity
-	25639	Distributor assy, 1" high capacity HW 1m88	24
3	BU28648	Distributor tube, 1" - 1 m 85 (ACS)	1
-	BU28650	Distributor tube, 1" - 1 m 06 (ACS)	1
-	BU28507	Distributor tube, 1" - 1m06 HW	1
-	12165-01	Distributor tube, 1" - 1m78 HW	1
4	25360	Bottom distributor, 1" high flow	1
-	27106	Bottom distributor, 1" high flow HW	1
5	25797	Bottom distributor, 1" UF & high capacity	1
-	27109	Bottom distributor, 1" UF & high capacity HW	1

11.7 Air checks list

500

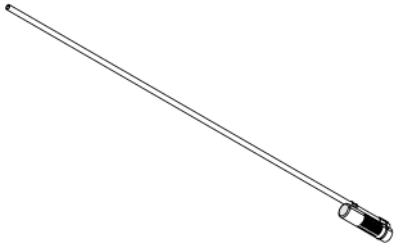

Item	Brine system	Part number	Description	Packaging quantity
-	1600	18168	Air checks 500A, 915mm (36")	48
-		26773	Air checks 500A, 1m25	48
-		23473	Air checks 500 HW	48

11.8 Meters parts list

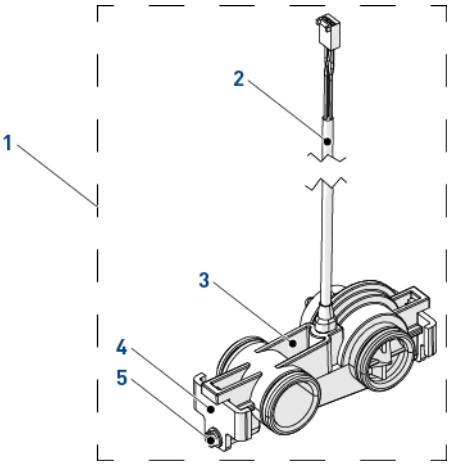

Item	Part number	Description	Packaging quantity
1	60626-01	Meter turbine assembly ¾" SXT	1
2	BR19791-01	Meter cable turbine assembly	1
3	19797	Meter turbine assembly 5800	1
4	19569SP	Clip	12
5	13314SP	Screw	50

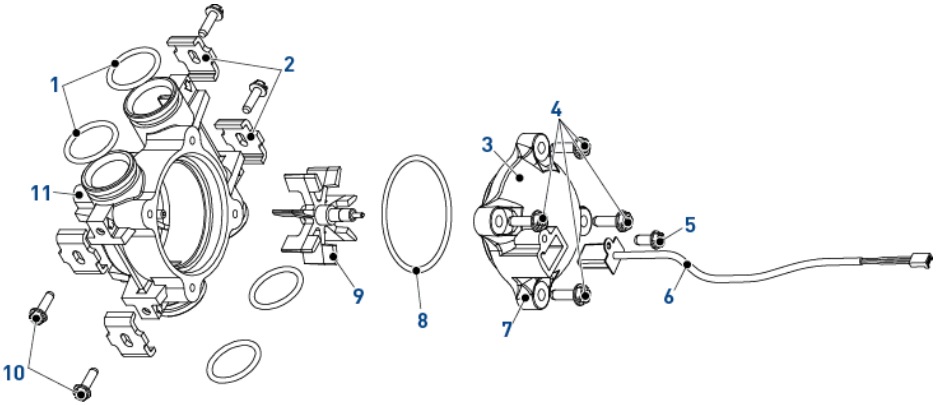

Item	Part number	Description	Packaging quantity
1	13305-01SP	O-ring 560 CD Adapt Coupling	10
2	13255SP	Mounting clip	12
3	13874	Cap, meter, electronic	1

Item	Part number	Description	Packaging quantity
4	12473SP	Screw, Hex Washer, 10-24 x 5/8	50
5	17798	Screw	10
6	19121-01	Meter Cable assembly, STX, Paddle	1
7	14716-01	Meter, Cap assembly, NT	1
8	13847SP	O-ring, -137, Standard, Meter	10
9	13509SP	Impeller, Meter	10
10	13314SP	Screw	50
11	13821	Body, Meter, 5600	1
Not shown	14613SP	Flow straightener	10

11.9 CE compliance parts list

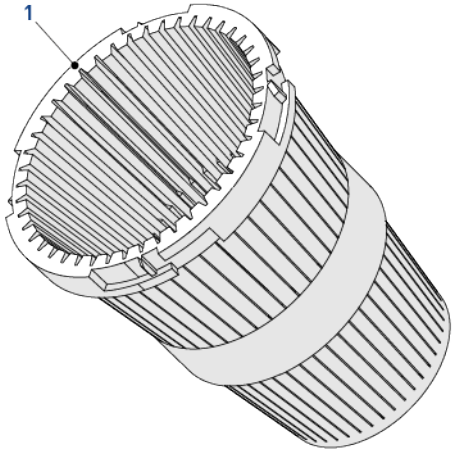

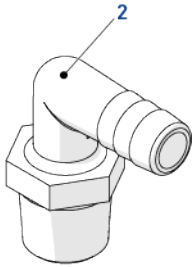

Item	Part number	Description	Packaging quantity
1	18280SP	Collector top 1" x 0.011 grey bayonet	10
2	21511SP	Hose barb 90° ½" x ½", black or grey	10

12 Disposal

The device must be scrapped in accordance with directive 2012/19/EU or the environmental standards in force in the country of installation. The components included in the system must be separated and recycled in a waste recycling center that conforms with the legislation in force in the country of installation. This will help to reduce the impact on the environment, health, safety and help to promote recycling. Pentair do not collect used product for recycling. Contact your local recycling center for more information.

Notes

www.pentairaquaeurope.com